U.S. Department of Justice
Federal Bureau of Investigation
Criminal Justice Information Services (CJIS) Division

ELECTRONIC BIOMETRIC TRANSMISSION SPECIFICATION (EBTS)

WITH

TECHNICAL AND OPERATIONAL UPDATES (TOU)

Version 10.0.9

May 22, 2018

NGI-DOC-01862-1.2

Prepared By:

Federal Bureau of Investigation
Criminal Justice Information Services Division
1000 Custer Hollow Road
Clarksburg, WV 26306

CHANGE HISTORY

Version/ Revision	Document Number	Revision Date	Section	Description of Change
10.0	NGI-DOC-01078-10.0	7/2/13	Full Document	Baseline Document
10.0	NGI-DOC-01078-10.0	8/12/13	Throughout	Bolded minor section headings
			3.1	Updated Figure 3
			3.3.1.4	Corrected IMT element number
			3.3.2.1	Corrected IMT element number
			3.3.1	Updated Figure 4
			3.4.1	Updated Figure 5
			3.4.2	Updated Figure 6
			3.6.1	Updated Figure 7
			Appendix C	Corrected field name “Eye Color”
				Added missing text to 2.027 HGT
				Added missing text in 2.033 FPC table
				Corrected example for 2.087 TAA
			Appendix E	Corrected superscript text for 2.2033 CNL in SRB in Table E-1
			Appendix F	Corrected major table numbers
				Corrected superscript for equations
				Corrected superscripted references in Table L-2 header row
			Appendix J	Removed text in Appendix J for non-existent column
			Appendix L	Corrected field name “Eye Color”
				Corrected superscripted references in Table L-2 header row
				Added missing footnote to Table L-3
			Appendix M	Corrected Count value for E0013 in Table M-1
			Appendix P	Corrected major table numbers
			Appendix AC	Corrected field name “Eye Color”
10.0.1	Not Applicable	2/5/14	3.1.1.6 EMUF	Updated second paragraph
			3.1.1.9 FIDR	Updated first paragraph
			3.1.3.1 RPIS	Updated second paragraph
			3.3.1.1 IRQ	Updated first paragraph
				Added paragraph after the first paragraph
			3.3.1.3 IRR	Updated first paragraph
			3.3.1.4 ISR	Updated first paragraph
			3.4.4.2 TXTSRCH	Updated first paragraph
				Added second and third paragraphs, describing TOT use
			3.4.4.4 SRB	Replaced second paragraph
			3.5.1 SPN	Updated first paragraph

CHANGE HISTORY

Version/ Revision	Document Number	Revision Date	Section	Description of Change
			3.5.6 ULM	Updated second paragraph
			3.6.5 BDEL	Updated third paragraph
			3.6.14 FISR	Updated first paragraph
			3.6.15 SPMNT	Updated second paragraph
			Appendix B	Added 1.011 NSR
			Appendix C	Relabeled column headings and table name; also reversed columns for Table 11 BID Values Table
				Updated 2.014 FBI Data Dictionary definition
				Updated 2.037 RFP Data Dictionary definition
				Updated 2.054 SSD Data Dictionary definition
				Updated 2.079 NCR Data Dictionary definition
				Updated 2.084 AMP Data Dictionary code table
				Updated 2.2010 NIR Data Dictionary definition
				Updated 2.2032C TOT of Dissemination for Max Length
				2.2058 SMD spelling correction in SMI Values Table
				Updated 2.2069B RBT for Min Occurrences
				Updated 2.2069C RBEI for Min Occurrences
			Appendix D	Updated 2.017 MNU for FDSP
				Updated 2.084 AMP for AMN, CAR, CNA, CPDR, CPNU, DEK, DEU, DOCE, EMUF, FANC, FAUF, FDSP, FIDR, FNDR, FVR, MAP, MPR, NFUE, NFUF, NNDR, and RPIS
				Added 2.098 NDR to FIDR
			Appendix E	Updated 2.014 FBI for IRR
				Updated 2.018 NAM for EQHR and EQRR
				Updated 2.021 CTZ for EQHR
				Updated 2.037 RFP from UULD
				Updated 2.073 CRI for EHRR, EQER, EQHR, EQRR and ERRR
				Updated 2.075 ERS for RBN
				Updated 2.084 AMP for SRT
				Updated 2.084 AMP for TPIS and TPRS
				Updated 2.098 NDR for ISR
				Updated 2.2033 CNL for SRB
				Updated 2.026 SMT for TXTSRCH
				Updated 2.2058 SMD for TXTSRCH
				Updated 2.2059 TCL for TXTSRCH
			Appendix F	Updated section 4.10.4 Requirement

Version/ Revision	Document Number	Revision Date	Section	Description of Change
			Appendix I	Removed 2.006 ATN from XACT and XACTR
				Updated 2.014 FBI for PDR
				Removed 2.055 SLE from SRNR
				Added 2.073 CRI, 2.2100 SED, 2.2101 SST, 2.2102 RSC, 2.2103 STT, and 2.2104 SRA to SRNR
				Added 2.073 CRI and 2.075 ERS to SRNRR
				Updated 2.084 AMP for FIS
				Updated 2.2035 EVI for DSPR
			Appendix J	Updated table heading for Table 45
				Updated Table 46
				Update table heading for Table 47
			Appendix K	Added sentence to end of section
			Appendix L	Updated FIS for T17
				Updated FIDR for T4 and T14
				Updated IRR for T9 and T14
				Updated IRQ Response TOTs
			Appendix M	Updated messages in Table M-1 based on Operational needs
				Added Error Class Key to Table M-1
			Appendix O	Corrected appendix introduction
10.0.2	Not Applicable	06/2/14	3.6.3 BDEC	Updated section
			Appendix C	Updated 2.019 AKA Data Dictionary definition
				Updated 2.038 DPR Data Dictionary definition
				Added 2.046 DOS to Data Dictionary
				Added 2.046 DOS to Table C-1
				Updated 2.088 NOT Data Dictionary definition
				Updated the data type for fields 2.2028G SMT, 2.2032I SMT, 2.2033M SMT and 2.2061D SMT
			Appendix D	Updated section introduction
				Removed 2.096 RPR, 2.098 NDR, 2.2037 ESI from DOCE
				Removed 2.096 RPR, 2.098 NDR, 2.2015 RBXD, 2.2020 RBR, 2.2037 ESI, 2.2040 RBT, 2.2062 RBNF, 2.2063 RBOO, 2.2064 RBUD, 2.2065 RBC, 2.2067 RBDI, 2.2070 RBATN, 2.2071 RBST from EMUF in Table D-1
				Removed 2.2007 SDOB and 2.2008 SNAM from ERRT in Table D-1
			Appendix E	Updated section introduction
				Added 2.046 DOS to CPR and PRR in Table E-1
				Removed 2.079 NCR from TPRR in Table E-1
			Appendix I	Updated section introduction
				Added 2.046 DOS to PDR and CPD in Table I-1

Version/ Revision	Document Number	Revision Date	Section	Description of Change
			Appendix L	Added 2.046 DOS to Table L-1
			Appendix M	Added A0015, L0031, M0033, M0051, and M0052 to Table M-1
			Appendix N	Updated 14.015 PPC Data Dictionary definition
10.0.3	Not Applicable	9/30/14	3.3.2	Updated Response Transaction list
			3.3.2.1 BATQ	Updated section
			3.3.2.2 BATR	Updated section title
			3.4.6	Reordered sections to conform with Response Transaction list
				Corrected TOT name for EQHR and EQRR
			3.4.6.3 EQER	Restored EQER section
			3.6.3 BDEC	Updated second paragraph
			3.6.23 RBMN-TR	Updated first paragraph
			Appendix A	Restored row for Friction Ridge Investigation Search – Latent to Table A-1
			Appendix B	Updated 1.013 DOM
			Appendix C	Updated 2.098 NDR Values Table
				Updated 2.2020 RBSL
			Appendix M	Added footnote to Table M-1
10.0.4	Not Applicable	3/13/15	1.8	Added new compression references
			3.4.5.1 IIIS	Updated sentence
			3.8.2	Updated first and second paragraph
			Appendix A	Updated Table A-1
			Appendix C	Updated section 1.1
				Updated 2.051 CSL definition
				Updated 2.2063 RBOO definition
			Appendix F	Update note under Table F-5
				Update web site reference under Table F-5
			Appendix L	Corrected transaction name for EHRR
				Updated IIDS for T10 and T17
				Updated IRR for T17
				Updated SRB for T17
			Appendix M	Added L0174 and L0179 to Table M-1
			Appendix O	Updated appendix introduction
			Appendix P	Updated section introduction text, sixth paragraph
				Updated web address for Palm Print Capture Guide
				Added note to Table P-2 Friction Ridge
			Appendix AC	Removed acronyms IID, IIE, IIER, IIR and IRD
				Corrected EHRR

CHANGE HISTORY

Version/ Revision	Document Number	Revision Date	Section	Description of Change
10.0.5	NGI-DOC-01800-1.5	6/13/15	3.3.1	Updated Response TOT list for CPR
			3.3.1.1 IRQ	Updated third paragraph
			3.4.2	Updated third paragraph
			3.4.4.3 FRS	Updated first paragraph
			3.4.6.4 EQRR	Updated first paragraph
			3.4.6.5 ERRR	Updated first paragraph and added second paragraph
			3.5.6 ULM	Updated third paragraph
			Appendix C	Updated 2.083 ULF name and definition
				Updated 2.2064A RBRN and 2.2064B RBFT in Table C-1
				Updated example for 2.071 ACN in Table C-1
				Updated name for 2.083 ULF in Table C-1
			Appendix L	Updated 2.083 ULF in Table L-1
				Updated CPR in Table L-4
			Appendix AC	Updated acronym for ULF
10.0.6	NGI-DOC-01800-1.6	6/20/16	1.8	Corrected URLs
			3.4.4.3 FRS	Added text to end of first paragraph
			3.6.13 FIS	Updated first paragraph
			3.6.14 FISR	Updated first paragraph
			Appendix C	Updated 2.046 DOS definition
				Corrected IDENT description in Table 23: NDR Values Table
			Appendix D	Added field 2.046 DOS to CPNU and FIDR
			Appendix E	Updated 2.073 CRI for FRS
			Appendix F	Updated Table F-2 for minimum modulation for 500 ppi scanner to 2 cy/mm
				Corrected URL for Mobile ID version 1 in Appendix F References
			Appendix O	Corrected CTZ value for four codes in POB Code Table
				Corrected FR code description
			Appendix AC	Corrected description for IIIS
10.0.7	NGI-DOC-01862-1.0	12/05/16	Throughout	1.0 – The EBTS (NGI-DOC-01078) and the TOU (NGI-DOC-01800) have been combined under a new document number (NGI-DOC-01862).
				Grammar, punctuation, and minor style updates
			1.8	Added new reference
			3.1.4	Corrected ERRT name
			3.2.2 SRE	Corrected Table 3 reference in text
			3.3.1.1 IRQ	Corrected name for ERRI in third paragraph
			3.4.2	Added “CMF Search?” to “ULF Flag Set?” Decision point in Search row in Figure 6
			3.4.3	Corrected ERRA transaction name

CHANGE HISTORY

Version/ Revision	Document Number	Revision Date	Section	Description of Change
10.0.7	NGI-DOC-01862-1.0	12/05/16	3.4.6.5 ERRR	Updated first paragraph
			3.5	Updated first paragraph
			Appendix B	Corrected description for 1.012 NTR
			Appendix C	Updated Table 17 IFS Values Table
			Appendix D	Removed 0..1 occurrence for field 2.2067 RBDI for FANC, FAUF, FNDR, MAP, NFUE, NFUF, and NNDR
				Removed 0..1 occurrence of field 2.2071 RBST for CAR, CPDR, and CPNU
			Appendix F	Added text in Section 4.10.6 that points to new reference
				Updated FAP 50 platen size in Table F-5
				Updated Mobile ID version in References
				Added new document in References
			Appendix H	Corrected sentence in second paragraph
			Appendix L	Added ERRB to Table L-3
			Appendix M	Removed L0174 code from Table M-1
				Added error message codes RB030 and RB031 to Table M-1
			Appendix O	Added South Sudan to Table O-1
			Appendix AC	Added acronym CMF
				Corrected DSPR Description
				Corrected EHRR Description
				Added ERRR
				Added acronym IFS
				Corrected IRR Description
10.0.8	NGI-DOC-01862-1.1	09/30/17	Throughout	Grammar, punctuation, and minor style updates
			3.1.1.21 SRE	Updated first paragraph
			3.1.1.22 ERRT	Added new section (Future Capability)
			3.1.3.2 RPISR	Updated RPISR description
			Appendix C	Updated description for 2.071 ACN
				Updated description for 2.047 ASL
				Updated description for 2.051 CSL
				Updated description for 2.2007 SDOB
				Updated description for 2.2008 SNAM
				Updated maximum occurrence for 2.047 ASL and 2.051 CSL in Table C-1
				Updated special characters for 2.071 ACN in Table C-1

CHANGE HISTORY

Version/ Revision	Document Number	Revision Date	Section	Description of Change
10.0.8	NGI-DOC-01862-1.1	09/30/17	Appendix D	Updated occurrence for 2.047 ASL for CAR, CNA, CPDR, CPNU, and LFS
				Updated occurrence for 2.051 CSL for CAR, CNA, CPDR, CPNU, and FDSP
				Updated occurrence for 2.2007 SDOB for ERRT (Future Capability)
				Updated occurrence for 2.2008 SNAM for ERRT (Future Capability)
				Added superscript for 2.051 CSL occurrence for FDSP
				Added new reference notes in Appendix D – Reference Notes
			Appendix E	Added 2.060 MSG occurrence for RBRPTR
			Appendix F	Added new sections 2.7 and 4.11
				Updated Image Quality for Mobile ID
			Appendix I	Updated occurrence for 2.047 ASL for SRNR
				Updated occurrence for 2.051 CSL for DSPE and SRNR
				Added superscript for 2.051 CSL occurrence for DSPE
				Added new footnote to Table I-1
			Appendix M	Updated error message code RB019
				Added error message code RB029
				Updated error message code L0154
				Added error message code M0055
10.0.9	NGI-DOC-01862-1.2	05/22/18	Throughout	Grammar, punctuation, and minor style updates
			1.2	Added wording about ASCII characters
			1.4	Added paragraph about EBTS Compliance Tool Suite
			1.8	Added Rap Back reference
			3.1.1	Removed MAPC TOT from EBTS
			3.1.1.15 MAPC	Removed MAPC TOT from EBTS
			3.1.1.20 Rap Back Subscription Request	Updated first paragraph
			3.4.4.2 TXTSRCH	Updated first paragraph
			3.5.3 RBRN	Updated RBRN description
			3.6.11 DSPE	Updated DSPE Section Title
			3.6.12 DSPR	Updated DSPR description
			3.6.20 RBSCVL	Updated RBSCVL description
			3.6.20 RBSCVL	Removed Rap Back Code value “F” from Rap Back Civil Catagory Code Values Table
			3.6.22 RBMNT	Updated RBMNT Section Title and third paragraph
			3.6.22 RBMNT	Updated Rap Back Replace & Renew descriptions
			3.8.4	Corrected plain thumb sizes in Recommended Sizes for Fingerprint Table
			Appendix A	Removed second paragraph
				Removed MAPC from Table A-2

Version/ Revision	Document Number	Revision Date	Section	Description of Change
10.0.9	NGI-DOC-00000-0.0	05/22/18	Appendix C	Updated Section 1.0 to clarify allowed ASCII characters
				Added footnote to Table C-1
				Edited descriptions for 2.064 CAN, 2.051 CSL, 2.044 GEO, and 2.018 NAM
				Removed 2.094 CNN from EBTS
				Removed Future Capability reference for 2.2018 DNAC and updated description
				Removed rap back code value “F" from RBC Values Table
				Updated rap back code “N” in RBMI Values Table
				Updated 2.2071 RBST description and removed RBST Values Table
				Updated description for 2.2049 RBTD
				Removed 2.099 SAN from EBTS
				Removed 2.2001 NAM1, 2.2002 NAM2, 2.2003 NAM3, 2.2004 NAM4 and 2.2005 NAM5 from EBTS
				Clarified special characters in Table C-1 for 2.009 OCA, 2.012 LCN, 2.2028G SMT, 2.20321 SMT, 2.2033 CNL, 2.2061D SMT, and 2.2072A NAM
				Added 2.2018 DNAC to Table C-1
				Updated Comments/Special Characters in Table C-1 for 2.2039 RBMI and 2.2049 RBTD
			Appendix D	Added 2.2018 DNAC to SRE in Table D-1
			Appendix I	Updated 2.2071 RBST for RBSCVL in Table I-1
			Appendix L	Removed Future Functionality reference for 2.2018 DNAC Table L-1
				Added missing fields to Table L-1
				Removed 2.094 CCN and 2.099 SAN from Table L-1
				Removed 2.2001 NAM1, 2.2002 NAM2, 2.2003 NAM3, 2.2004 NAM4, and 2.2005 NAM5 from Table L-1
			Appendix M	Added error message code L0032
				Added new error message codes L0042, L0176, L0181, L0182, M0056, and M0057
			Appendix N	Added field 14.025 ASEG to Appendix N
			Appendix O	Updated first paragraph
			Appendix AC	Updated acronyms in Appendix AC

Table of Contents

1 Introduction ... 17
1.1 Background ... 17
1.2 File Format ... 17
1.3 Change Control ... 18
1.4 Error Handling ... 18
1.5 Identifying Previous Transactions ... 19
1.6 Data Storage in the FBI/CJIS Database ... 20
1.7 Guidance on ORI and CRI Usage ... 20
1.8 Reference Documents ... 21
1.9 Specific Changes to this Version ... 22
2 Scope ... 23
3 Services and Transaction Types ... 25
3.1 Identification Service ... 25
3.1.1 Tenprint Fingerprint Identification Submission ... 26
3.1.1.1 Criminal Tenprint Submission (Answer Required) (CAR) ... 28
3.1.1.2 Criminal Tenprint Submission (No Answer Necessary) (CNA) ... 28
3.1.1.3 Criminal Fingerprint Direct Route (CPDR) ... 29
3.1.1.4 Criminal Fingerprint Processing Non-Urgent (CPNU) ... 29
3.1.1.5 Departmental Order Channeling Electronic (DOCE) ... 29
3.1.1.6 Electronic In/Manual Out User Fee (EMUF) ... 29
3.1.1.7 Federal Applicant (No Charge) (FANC) ... 30
3.1.1.8 Federal Applicant User Fee (FAUF) ... 30
3.1.1.9 Foreign Information Direct Route (FIDR) ... 30
3.1.1.10 Federal No Charge Direct Route (FNDR) ... 30
3.1.1.11 Non-Federal No Charge Direct Route (NNDR) ... 31
3.1.1.12 Non-Federal User Fee Expedite (NFUE) ... 31
3.1.1.13 Non-Federal Applicant User Fee (NFUF) ... 31
3.1.1.14 Miscellaneous Applicant Civil (MAP) ... 31
3.1.1.15 Miscellaneous Applicant Civil (Manual Out) (MAPC) - Deprecated on 5/22/18 TOU 9 ... 31
3.1.1.16 Known Deceased (DEK) ... 32
3.1.1.17 Unknown Deceased (DEU) ... 32
3.1.1.18 Missing Person (MPR) ... 32
3.1.1.19 Amnesia Victim (AMN) ... 32
3.1.1.20 Rap Back Subscription Requests ... 33
3.1.1.21 Submission Results — Electronic (SRE) ... 33
3.1.1.22 Tenprint Transaction Error Response (ERRT) (Future Capability - effective 10/2018) ... 36
3.1.2 Latent Fingerprint Identification Submission ... 36
3.1.2.1 Latent Fingerprint Image Submission (LFS) ... 36
3.1.2.2 Latent Submission Results (LSR) ... 37
3.1.3 Rapid Fingerprint Identification Search Submission ... 37
3.1.3.1 Rapid Fingerprint Identification Search (RPIS) ... 38
3.1.3.2 Rapid Fingerprint Identification Search Response (RPISR) ... 38
3.1.4 Disposition Fingerprint Submission ... 39
3.1.4.1 Electronic Fingerprint Disposition Submission (FDSP) ... 39
3.1.5 Iris Identification Search Submission (Future Capability) ... 40
3.1.5.1 Iris Image Identification Submission (IIDS) (Future Capability) ... 40
3.2 Verification Service ... 40
3.2.1 Fingerprint Verification Request (FVR) ... 41
3.2.2 Fingerprint Verification Response (SRE) ... 41
3.3 Information Service ... 41

3.3.1 Biometric Image Retrieval Submission 42
3.3.1.1 Biometric Image/Feature Retrieval Request (IRQ) 44
3.3.1.2 Subject Photo Request (CPR) 45
3.3.1.3 Image Request Response (IRR) 45
3.3.1.4 Image Summary Response (ISR) 45
3.3.1.5 Photo Request Response (PRR) 46
3.3.2 Biometric Audit Trail Retrieval Submission 46
3.3.2.1 Biometric Audit Trail Query (BATQ) 46
3.3.2.2 Biometric Audit Trail Response (BATR) 47
3.3.2.3 Information Transaction Error (ERRI) 47
3.3.3 Rap Back Information Retrieval Submission 47
3.3.3.1 Rap Back Subscription List Request (RBRPT) 48
3.3.3.2 Rap Back Subscription List Response (RBRPTR) 48
3.3.3.3 Rap Back Identity History Summary Request (RBIHS) 48
3.3.3.4 Rap Back Identity History Summary Response (RBIHSR) 48
3.4 Investigation Service 49
3.4.1 Tenprint Fingerprint Investigation Submission 49
3.4.1.1 Tenprint Fingerprint Image Search (TPIS) 51
3.4.1.2 Tenprint Rap Sheet Search (TPRS) and Responses (TPRR) 51
3.4.1.3 Search Results — Tenprint (SRT) 51
3.4.2 Latent Friction Ridge Investigation Submission 52
3.4.2.1 Latent Friction Ridge Image Search (LFIS) 55
3.4.2.2 Latent Friction Ridge Features Search (LFFS) 56
3.4.2.3 Search Results - Latent (SRL) 56
3.4.2.4 Latent Penetration Query (LPNQ) 57
3.4.2.5 Latent Penetration Query Response (LPNR) 57
3.4.3 Latent Administrative Queries, Requests, and Responses 58
3.4.3.1 Latent Repository Statistics Query (LRSQ) 58
3.4.3.2 Latent Repository Statistics Response (LRSR) 58
3.4.4 Biometric Investigation Submission 59
3.4.4.1 Photo Investigation Submission 59
3.4.4.2 Text-Based Photo/SMT Search Request (TXTSRCH) 59
3.4.4.3 Facial Recognition Search Request (FRS) 60
3.4.4.4 Search Results - Biometric (SRB) 60
3.4.5 Iris Image Investigation Search Submission (Future Capability) 61
3.4.5.1 Iris Image Investigation Search (IIIS) (Future Capability) 61
3.4.6 Biographic Investigation Submission 62
3.4.6.1 External Query History Request (EQHR) 62
3.4.6.2 External History Request Response (EHRR) 63
3.4.6.3 External Query History Error Response (EQER) 63
3.4.6.4 External Query History Request Response - Summary (EQRR) 63
3.4.6.5 Transaction Error (Electronic Response) (ERRR) 63
3.5 Notification Service 63
3.5.1 Special Population Cognizant Notification (SPN) 64
3.5.2 Rap Back Activity Notification (RBN) 64
3.5.3 Rap Back Renewal Notification (RBRN) 65
3.5.4 Unsolicited Hit Notification (UHN) 65
3.5.5 Unsolved Biometric Match (UBM) 65
3.5.6 Unsolved Latent Match (ULM) 65
3.5.7 Unsolicited Unsolved Biometric Delete (UUBD) 66
3.5.8 Unsolicited Unsolved Latent Delete (UULD) 66
3.6 Data Management Service 67
3.6.1 Unsolved Latent Record Delete Request (ULD) 68
3.6.2 Unsolved Latent Delete Response (ULDR) 68

3.6.3 Biometric Decision Submission (BDEC) ... 69
3.6.4 Biometric Decision Response (BDECR) ... 69
3.6.5 Biometric Delete Request (BDEL) ... 69
3.6.6 Biometric Delete Response (BDELR) ... 70
3.6.7 Civil Event Deletion Request (CDEL) ... 70
3.6.8 Civil Event Deletion Response (CDELR) ... 70
3.6.9 Subject Photo Delete Request (CPD) ... 70
3.6.10 Subject Photo Delete Response (PDR) ... 70
3.6.11 Disposition File Maintenance Submission (DSPE) ... 71
3.6.12 Disposition File Maintenance Response (DSPR) ... 71
3.6.13 Biometric Image Submission (FIS) ... 71
3.6.14 Biometric Image Submission Response (FISR) ... 71
3.6.15 Special Repository Maintenance Request (SPMNT) ... 72
3.6.16 Special Repository Maintenance Response (SPMNTR) ... 72
3.6.17 Supervised Release Notification Request (SRNR) ... 72
3.6.18 Supervised Release Notification Response (SRNRR) ... 72
3.6.19 Rap Back Subsequent Subscription Request – Criminal (RBSCRM) ... 73
3.6.20 Rap Back Subsequent Subscription Request – Civil (RBSCVL) ... 73
3.6.21 Rap Back Subscription Response (RBSR) ... 74
3.6.22 Rap Back Maintenance Request (RBMNT) ... 74
3.6.23 Rap Back Maintenance Response (RBMNTR) ... 75
3.6.24 External System Link Activity Request (XACT) ... 76
3.6.25 External System Link Activity Response (XACTR) ... 76
3.6.26 External System Link Maintenance Request (XMNT) ... 76
3.6.27 External System Link Maintenance Response (XMNTR) ... 76
3.7 Error Message Format ... 76
3.8 Other Special Requirements for Communicating with the FBI/CJIS ... 77
3.8.1 Electronic Fingerprint Images ... 77
3.8.2 Fingerprint Image Compression/Decompression Algorithm ... 78
3.8.3 FBI/CJIS Image Quality Specifications ... 79
3.8.4 Fingerprint Image Size Requirements ... 79
3.8.5 Bulk Submissions ... 79

List Of Appendices

Appendix A Transaction Response Times A-1
Appendix B Descriptors And Field Edit Specifications For Type-1 Logical Records B-1
Appendix C Descriptors And Field Edit Specifications For Type-2 Logical Records C-1
Appendix D Summary Logical Record Layouts For Type-2 Identification And Verification Transactions D-1
Appendix E Summary Logical Record Layouts For Type-2 Investigation, Information, And Notification Transactions E-1
Appendix F FBI/CJIS Image Quality Specifications F-1
Appendix G Reserved G-1
Appendix H Descriptors And Field Edit Specifications For Type-7 Logical Records H-1
Appendix I Summary Logical Record Layouts For Type-2 Data Management Transactions I-1
Appendix J Descriptors And Field Edit Specifications For Type 9 Logical Records J-1
Appendix K Descriptors And Field Edit Specifications For Type 10 Logical Records K-1
Appendix L Summary Tables L-1
Appendix M Transaction Error Messages M-1
Appendix N Descriptors And Field Edit Specifications For Type-14 Logical Records N-1
Appendix O POB Code Table O-1
Appendix P Specifications For Transmitting Palm Prints And Supplemental Fingerprints P-1
Appendix Q Descriptors And Field Edit Specifications For Type-15 Logical Records Q-1
Appendix R Descriptors And Field Edit Specifications For Type-13 Logical Records R-1
Appendix AC Acronyms AC-1

List Of Tables

Table 1 Rap Back Subscription Fields used in Tenprint Identification TOTs 33
Table 2 Values of NAM, FBI/UCN and SID Returned in the SRE 34
Table 3 Values of NAM, FBI/UCN and SID Returned in the SRE for FVR 41
Table 4 Unsolved Record Submission Matches 66
Table 5 Rap Back Criminal Category Code Values 73
Table 6 Rap Back Civil Category Code Values 73
Table 7 Compression Algorithm Values 77
Table 8 Recommended Sizes for Fingerprint 78
Table A-1 NGI Maximum Transaction Response Times A-2
Table A-2 NGI Type of Transaction By Service A-4
Type-1 Data Dictionary B-2
Type-2 Data Dictionary C-3
Table 9 AMP Codes Table C-4
Table 10 BIA Values Table C-6
Table 11 BID Values Table C-7
Table 12 CDN Values Table C-10
Table 13 EYE Values Table C-14
Table 14 FPC Values Table C-16
Table 15 HAI Values Table C-17
Table 16 HTI Values Table C-18
Table 17 IFS Values Table C-18
Table 18 IMT Values Table C-19
Table 19 MAI Values Table C-20
Table 20 MIL Values Table C-20
Table 21 MNU Values Table C-21
Table 22 NAM Values Table C-22
Table 23 NDR Values Table C-22
Table 24 PAT Values Table C-24
Table 25 POB Values Table C-25
Table 26 RAC Values Table C-27
Table 27 RBC Values Table C-28
Table 28 RBMI Values Table C-28
Table 29 RBNF Values Table C-28
Table 30 RBT Values Table - Currently Not Used C-30
Table 31 RBT Values Table C-30
Table 32 RCD Values Table C-33
Table 33 RSR Response Example Values Table C-35
Table 34 RSR File Category Specification C-35
Table 35 SEX Values Table C-36
Table 36 SMI Values Table C-37
Table 37 SRA Values Table C-38
Table 38 SRF Values Tables C-39
Table 39 SST Values Table C-39
Table 40 TLI Values Table C-40
Table 41 TSR Values Table C-40
Table C-1 Field Edit Specifications for Type-2 Elements C-42
Table D-1 Summary of Field Lists for Identification and Verification Transactions D-2
Table E-1 Summary of Field Lists for Investigation, Information, and Notification Transactions E-2
Table F-1 Minimum Capture Sizes F-2
Table F-2 MTF Requirement Using Sine Wave Target F-5
Table F-3 Requirement Using Bar Target (Nominal Test Frequencies) F-6
Table F-4 Printer Geometric Accuracy Requirements F-14

Table F-5 Mobile ID IQS Requirements....F-21
Table F-6 Fast Track Certification Procedures (Common Scenarios)....F-23
Table H-1 Field List for Type-7 (Miscellaneous Image) Logical Records....H-2
Table I-1 Summary of Field Lists for Data Management Transactions....I-2
Type-9 Data Dictionary....J-2
Table 42 Type-9 EFS Fields Utilized by NGI for Matching....J-2
Table 43 Type-9 EFS Fields Populated by NGI in an EBTS Response....J-3
Table 44 FCP Values Table....J-4
Table 45 FCP Values Table....J-7
Table 46 Finger Number Table....J-8
Table 47 MAT Values Table....J-9
Type-10 Data Dictionary....K-2
Table L-1 Complete Element Cross-Reference List by Tag Number....L-2
Table L-2 Record Set Requirements Summary by Type of Transaction....L-12
Table L-3 Record Set Requirements Summary by Type of Response....L-14
Table L-4 Transaction/Response/Error TOT Correspondence....L-16
Table M-1 Transaction Message....M-2
Type-14 Data Dictionary....N-2
Table 48 ISC Values Table....N-2
Table O-1 POB Code Table....O-2
Table P-1 Print Position Descriptor Code Table....P-8
Table P-2 Friction Ridge Generalized Position Codes....P-12
Type-15 Data Dictionary....Q-2
Table 49 ISC Values Table....Q-2
Type-13 Data Dictionary....R-2
Appendix AC: Acronyms....AC-1

List of Figures

Figure 1 Example ORI and CRI Ownership Flow 21
Figure 2 Relationship Between UCN, EVI and BSI 24
Figure 3 Electronic Fingerprint Identification Submission 26
Figure 4 Biometric Image Retrieval Submission 42
Figure 5 Investigation Fingerprint Submission 50
Figure 6 Latent Friction Ridge Investigation Workflow 55
Figure 7 Electronic Requests to Delete Unsolved Latent Friction Ridge Records 68
Figure 8 Auxiliary Information Printed in Tenprint Card Format Print (Example Text) F-19
Figure 9 FBI Standard Fingerprint Card (FD-249) P-4
Figure 10 FBI Standard Palm Print Card (FD-884) Front P-5
Figure 11 FBI Standard Palm Print Card (FD-884) Reverse P-6
Figure 12 New FBI Standard Supplemental Finger/Palm Print Card (FD-884a) - Front P-7
Figure 13 New FBI Standard Supplemental Finger/Palm Print Card (FD-884a) - Reverse P-8
Figure 14 Distal, Medial and Proximal Joints P-10
Figure 15 Finger and Palm Segment Positions P-11

1 Introduction

1.1 Background

In accordance with the recommendations of the FBI/CJIS Advisory Policy Board (APB) Identification Services Subcommittee, the FBI has developed this standard for electronically encoding and transmitting biometric image, identification, and arrest data that extends the American National Standards Institute/National Institute of Standards and Technology - Information Technology Laboratory (ANSI/NIST-ITL) standard. ANSI/NIST-ITL is developed and maintained in conjunction with the National Institute of Standards and Technology (NIST) and the biometric identification community.

While the aforementioned ANSI/NIST-ITL standard provides the guidelines for the exchange of biometric information between various federal, state, local, tribal, and international systems, the FBI's EBTS defines requirements to which agencies must adhere when electronically communicating with the FBI. Functional changes to the EBTS are documented in Technical and Operational Updates (TOUs) as an interim solution between major versions. User compliance requires adherence to the most recent major version of the EBTS and incorporation of all TOUs.

The FBI's EBTS and its future revisions will inherit the basic requirements for logical records set forth in the ANSI/NIST-ITL standard. However, the FBI/CJIS-specific requirements for the contents and composition of logical records Type-1 (Header Information), Type-2 (Transaction Descriptive, Demographic and Biographic Information), Type-4 (Fingerprint Image Descriptive Information), Type-7 (Tenprint Fingerprint Card Images), Type-9 (Fingerprint Minutiae Information), Type-10 (Photo Images), Type-13 (Latent Friction Ridge Images), Type-14 (Variable Resolution Fingerprint Images), Type-15 (Palm Print Images), Type-17 (Iris Images), and other record types are contained in this EBTS.

1.2 File Format

An EBTS transaction is comprised of records. EBTS defines the composition of records within a transaction that is transmitted between the FBI’s Next Generation Identification System (NGI) and another site or agency. All records in a transaction shall pertain to a single subject; data used to identify another individual requires a separate transaction.

All of the records belonging to a single transaction shall be transmitted together. There may be multiple records in a transaction of each Record Type other than Type-1. Record Types-1 and -2 are used to describe the transaction and the subject respectively, and are required. These may be accompanied by one or more data records containing biometric data. The maximum number of records in a transaction is restricted to 1000.

In order to ensure that the transaction description information can be read by all systems, all fields within a Type-1 Record shall always be encoded using 7-bit American National Standard Code for Information Interchange (ASCII), with the 8th (leftmost) bit of each byte containing a zero. This is consistent with the specification of UTF-8 for XML encodings, since ASCII is a subset of UTF-8.

For other Record Types, the default character encoding for Traditional encoding is 7-bit ASCII. Users are encouraged to use UTF-8 for 'U' and 'user-defined' character types that do not require special control characters in Traditional Encoding. It is not possible to switch encodings within an XML transaction. For more information on ASCII characters, see Appendix C.

The first field in a traditional record (2.001 LEN) shall contain the length in bytes of the record. The second field shall contain the version number in the Type-1 record, while in other records this field contains the information designation character (2.002 IDC). In Traditional Record Types conveying binary data (Type-10 through Type-99) the data field will always be the last field in the Record. The remaining traditionally encoded ASCII fields may occur in any order.

For Type-4 and Type-7 binary image records, the content and order of the recorded fields are specified by this standard. All fields and data in these Record Types shall be recorded as binary information in Traditional encoding.

The domain (1.013 DOM) field shall be mandatory for transactions to/from FBI/CJIS in support of proper file validation and field usage, as well as file interoperability among disparate systems.

1.3 Change Control

The EBTS defines the interface between FBI/CJIS and the state, tribal, international, and other federal organizations' (OFO) systems. Any changes to the data fields or formats within the EBTS must honor previously published protocols to ensure that the systems are not adversely affected. Since these systems were developed independently, a convention has been established to coordinate enhancements within the various systems while maintaining interoperability. This convention is based on the tagged field structure defined in the ANSI/NIST-ITL standard and the understanding that field definitions cannot change over time or from system to system.

To facilitate system evolution, each system is assigned an autonomous range of field numbers that it is allowed to define to meet operational needs. These new fields cannot be made mandatory for established functionality, but enhance functionality for those systems wishing to incorporate the new definition. With this process in place, every system on the network has the opportunity to enhance its own system on its own schedule, yet no system is ever forced to make a change in order to maintain current functionality.

1.4 Error Handling

Error handling takes on two primary forms within FBI/CJIS: front-end error detection and internal process error detection and correction. The front-end process examines every incoming transaction from a security and mandatory data perspective. Potential security violations are rejected and transferred immediately to a system administrator. Transactions lacking mandatory data, or that are incomplete in referenced content, are rejected back to the contributor. All mandatory data and all optional data fields are validated. Optional data failing this validation check are ignored. Mandatory data that fail this validation check are passed to a Quality Check (QC) Service Provider

for resolution. If the service provider can resolve the issue, the transaction will be forwarded for further processing. If the service provider cannot resolve the issue, the transaction will either be rejected or sent forward for attempted resolution later in the process.

Internal process error detections and corrections are performed any time FBI/CJIS attempts to utilize incoming data to perform a search or update a database. Errors in submissions detected at that time will be forwarded to a logic error resolution service provider. If the service provider cannot resolve the issue, the transaction will be rejected.

In the interpretation of logical records, the inclusions of tags that are not defined for the requested transaction are not to be considered an error. These fields will be ignored, and neither saved nor returned to the contributor in responses sent from FBI/CJIS. For XML encoding, the fields that are included in the State Defined Fields element (SDF) will be ignored by FBI/CJIS. This makes it possible to use a single transmission format across different systems, for example, to control both intrastate and interstate transmissions.

Fields generally should not be transmitted when there is no value present (e.g., 2.033:{GS}). However, receipt of such an empty field, if the field is not mandatory, will not result in rejection of the record or issuance of an error message. Rejection will occur when missing or incorrect data is received that would prevent processing of the transaction. The following list illustrates these types of errors.

- A mandatory field missing in a submitted record set (e.g., NAM field 2.018 is missing in the Type-2 record for the TOT of a CAR) would result in immediate rejection;
- The format of a mandatory field is incorrect (e.g., an alpha character is discovered in the SOC field) and would result in an attempt to correct the data;
- The range of data of a mandatory field is incorrect (e.g., a DOB of 18871332 was submitted—century, month, and day are all out of range) and would result in an attempt to correct the data;
- Incorrect data that cannot be corrected by a service provider and without which the transaction processing cannot continue would result in the transaction being rejected.

Section 3.7 lists the current set of error messages that are pertinent to the EBTS user.

The EBTS Compliance Tool Suite, consisting of the Transaction and Reference Tools, is helpful to use before submitting a transaction to identify and resolve potential errors before transactions are rejected. The Transaction Tool allows users to validate transactions by displaying if a transaction is invalid or valid according to EBTS requirements. If invalid, the tool displays missing and incorrect fields. The Reference Tool provides users with the ability to easily view transaction, record, and field requirements in the EBTS specification. Both tools can be found at www.fbibiospecs.cjis.gov/EBTS/Approved.

1.5 Identifying Previous Transactions

The fields Transaction Control Number (1.009 TCN) and Transaction Control Reference (1.010

TCR) are used to link requests with their corresponding responses. Every transaction must contain a unique TCN. Transactions that refer to previous submissions also contain a TCR, which is defined as the TCN of the referenced submission.

When the FBI/CJIS receives a request transaction and generates the response, it places the TCN of the request into the TCR field of the response as a reference number the submitter can use to mate the response with the original submission. FBI/CJIS places its own identifier for the response transaction in the TCN field.

The TCN in the response can be used by the submitter should the transaction need to be reopened for any purpose. For example, if FBI/CJIS rejected the first submission of a user-fee transaction due to poor quality fingerprint images, the user would place this number in the TCR field of the resubmitted transaction to enable FBI/CJIS to verify the user's authorization to resubmit within one year at no charge.

1.6 Data Storage in the FBI/CJIS Database

Transaction data submitted to the FBI/CJIS may or may not be stored in the FBI/CJIS database. Data not stored is considered to be user-defined. If submitted, user-defined data is returned in the response transaction as an aid to the submitter in interpreting and routing the FBI/CJIS response. It may differ in format from the originally submitted data. The following user-defined fields, which are not stored at FBI/CJIS, are always returned as submitted: ATN, SCO, EAD, OCP, RES, and TAA.

1.7 Guidance on ORI and CRI Usage

The following description offers some guidance in using the Controlling Agency Identifier[1] (CRI) field to provide appropriate authorization to perform file maintenance. This scenario is developed by examining how an electronic submission might be formed by a contributor and passed to FBI/CJIS. Since contributors ultimately manage the use of the CRI field, this is only intended as a hypothetical example.

Assume a print is obtained by a local agency, passed to a county agency for processing, and subsequently to the FBI/CJIS Systems Agency (CSA) for transmission to the FBI/CJIS. In such a case, the transmission of field 1.008 - Originating Agency Identifier (ORI) and field 2.073 - CRI might appear as follows:

1 The CRI field must contain only FBI authorized ORIs.

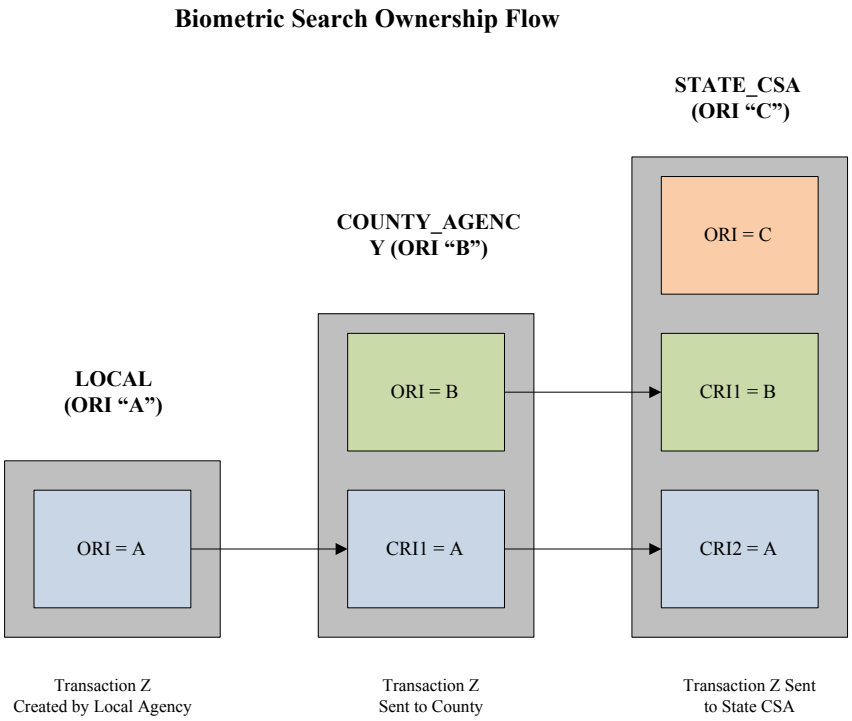

Figure 1 Example ORI and CRI Ownership Flow

When generated at the local level, no CRI is required since this ORI is the originator. On receipt by the county agency and subsequent transmission to the state CSA, the original ORI is entered as the first instance of the CRI and the county ORI replaces the local ORI in the ORI field. On receipt by the state CSA and for subsequent retransmission to the FBI/CJIS, the local ORI is retained as CRI2, the county ORI is entered as CRI1, and the ORI of the state CSA is entered in the ORI field. The transaction is then forwarded to the FBI/CJIS via the FBI/CJIS WAN. CRI1, the county agency ORI, is then used as the authority for action and thus retains 'ownership' of the transaction. In the response, the transaction is sent to the ORI from which it was sent, and it is the responsibility of the state CSA to route it properly to the county agency identified in CRI1. The county agency, in turn, would route the response to the local agency as appropriate.

1.8 Reference Documents

- American National Standards Institute/National Institute of Standards and Technology (ANSI/NIST) – Information Technology Laboratory (ITL) 1-2011 American National Standard For Information Systems – Data Format for the Interchange of Fingerprint, Facial, and Other Biometric Information, November 2011, https://www.nist.gov/publications/data-format-interchange-fingerprint-facial-other-biometric-information-ansinist-itl-1
- IAFIS-IC-00110(V3.1), Criminal Justice Information Services (CJIS) Wavelet Scalar Quantization (WSQ) Grayscale Fingerprint Image Compression Specification, dated October 4, 2010, provides the definitions, requirements, and guidelines for specifying the

FBI/CJIS's WSQ compression algorithm. The document specifies the class of encoders required, decoder process, and coded representations for compressed image data. Latent images are not compressed.
http://www.fbibiospecs.cjis.gov/Document/Get?fileName=WSQ_Gray-scale_Specification_Version_3_1_Final.pdf

- Examination of Downsampling Strategies for Converting 1000 ppi Fingerprint Imagery to 500 ppi, dated January 22, 2013,
http://www.nist.gov/customcf/get_pdf.cfm?pub_id=912779
- NIST Special Publication 500-289, dated August 2013,
http://nvlpubs.nist.gov/nistpubs/specialpublications/NIST.SP.500-289.pdf
- Examination of the Impact of Fingerprint Spatial Area Loss on Matcher Performance in Various Mobile Identification Scenarios, March 2014,
http://nvlpubs.nist.gov/nistpubs/ir/2014/NIST.IR.7950.pdf
- Contact Rap_Back@ic.fbi.gov for information about obtaining the latest version of the Rap Back Policy and Implementation Guide

1.9 Specific Changes to this Version

This version of the EBTS represents Full Operational Capability of the NGI system and includes the following list of new services (new/modified TOTs in parenthesis):

1. Face image searching (FRS, SRB, UBM, ERRB, UUBD)
2. Face and Scars, Marks and Tattoos (SMT) text-based searching (TXTSRCH, SRB)
3. Rap Back services (RBSCRM, RBSCVL, RBSR, RBRN, RBMNT, RBMNTR, RBN, RBIHS, RBIHSR, RBRPT, RBRPTR)
4. Disposition Reporting Enhancements (FDSP, SRE, DSPE, DSPR, SRNRR)
5. Civil event maintenance (CDEL, CDELR)
6. External system interoperability (XACT, XACTR, XMNT, XMNTR)
7. RISC repository (FIDR, SPMNT, SPMNTR, SPN)
8. Iris image searching (future capability) (IIDS, IIIS, SRB)

In addition to the new capabilities, several existing TOTs were expanded to support biometric types other than friction ridge. These TOTs are:

- IRQ, IRR
- FIS, FISR
- BDEC, BDECR
- BDEL, BDELR
- BATQ, BATR

Also, the existing SRE response is modified to include the Biometric Image Enrollment (2.2061 BIE) and Biometric Image Available (2.2031 BIA) fields to inform the user of which biometrics from their submission were successfully enrolled and what biometric types are available for the matched identity respectively. SRE is also modified to reflect Rap Back subscription information, when enrollment into Rap Back is requested within the tenprint fingerprint identification search request.

2 Scope

The scope of the EBTS has been expanded over previous versions to include additional biometric types (e.g., face, palm) in recognition of the rapidly developing biometric industry. Significant efforts have been made to clearly delineate between those EBTS sections which describe the functionality within FBI/CJIS that is currently available to the Authorized Contributor community and what is anticipated to be developed in the future. Functionality under development and not yet available to the user community is referred to in this document as "Future Capability".

The ANSI/NIST-ITL standard includes record types for numerous biometrics. FBI/CJIS will accept biometric and descriptive data for friction ridge (fingers, palms and joints/tips), photo (face and SMT) and iris records in accordance with the ANSI/NIST-ITL standard. NGI will provide identification and/or investigative services for each of these biometric types.

The NGI System will also provide Identity Management, which will involve linking records from the civil, criminal and new repositories by a unique identity reference. The NGI System will refer to this new identifier as a Universal Control Number (UCN). NGI will place this UCN into the FBI Number/UCN field (2.014 FBI). The FBI/CJIS Division is working closely with the user community prior to the transition to UCN. Unique event references and unique biometric set references have also been added to NGI in order to facilitate identification, retrieval, and modification of fingerprint events and biometric images. The diagram below illustrates the relationships between these identifiers.

A UCN may have multiple Event Identifiers (2.2035 EVI) associated with it, for example, a person who is arrested and fingerprinted multiple times (EVI1 and EVI2 below). An EVI may have multiple Biometric Set Identifiers (2.2029 BSI) associated with it, one for each modality captured during the event; for example fingerprints and palm prints taken during a booking process (BSI=1 and BSI=2 below).

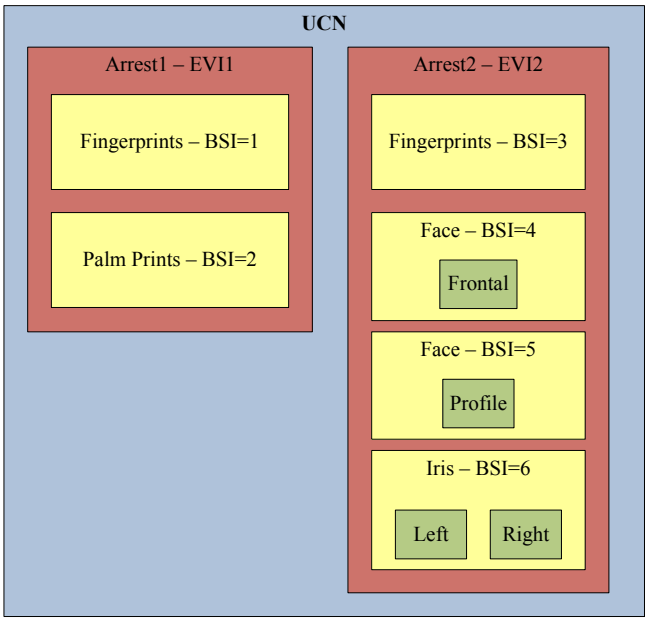

Figure 2 Relationship Between UCN, EVI and BSI

This document specifies in detail the file and record content, format, and data codes necessary for the exchange of fingerprint, palm print, photo, facial, and iris information between federal, state, and local users and the FBI/CJIS. It provides a description of all requests and responses associated with the electronic fingerprint identification service and other services. This specification is organized by User Services that include the following:

1. Identification Service
2. Verification Service
3. Information Service
4. Investigation Service
5. Notification Service
6. Data Management Service

3 Services and Transaction Types

This section describes the User Services offered by NGI and the EBTS Transactions that comprise them. NGI offers the following User Services: Identification Service, Verification Service, Information Service, Investigation Service, Notification Service, and Data Management Service. These Services and their corresponding transactions are also listed in Table A-2 NGI Type of Transaction by Service in Appendix A.

The transactions that are labeled 'Future Capability' are included in this specification to allow users the opportunity to see what is planned for future development.

3.1 Identification Service

These transactions will originate from live scan booking terminals, FBI Field Offices, card scanners or mobile devices at either the federal, state, or local level (see Figure 3 "Electronic Fingerprint Identification Submissions"). Local submissions may be processed by a local AFIS and electronically transmitted to a State Identification Bureau (SIB) for processing. If a positive identification is made at the state level, an Ident response will be transmitted back to the local agency. If it is a criterion offense, it will also be forwarded to the FBI/CJIS. What constitutes a criterion offense is determined according to the submitting state's retention policy and legislation. The processing flow for a civil electronic fingerprint identification submission is similar to the criminal submission flow, except that in the event of state-level Ident response, the submission may still be forwarded to the FBI/CJIS for processing under Federal and/or state statutory authority.

If no identification is made at the SIB level, the data will be forwarded via the CJIS WAN to the FBI/CJIS for processing. Transmitted data will be automatically parsed, and a search will be conducted of the FBI/CJIS's friction ridge files. An identification of the submitted fingerprint images may be verified by an FBI/CJIS fingerprint examiner. Electronic responses[2] from FBI/CJIS to the contributor will be routed via the CJIS WAN through the SIB using the ORI. Subsequent routing to the arresting agency is made by the SIB using the CRI. Additional copies are routed by the SIB using the SCO field or other related information (see Appendices B and C for detailed ORI, SCO, and CRI definitions).

Responses to submissions or searches by OFOs, tribal, or international agencies will be transmitted directly to the submitting agencies. When these responses are positive identifications, these responses will contain an Identity History Summary giving the individual subject's identification and disseminable criminal history, when requested. This information is provided in the Electronic Rap Sheet field of the response being returned to the submitting agency.

These transactions are detailed in Appendix D with edit specifications for the fields used being found in Appendix C. These requests may include cascading searches of the Unsolved Latent File after a response has been provided to the Authorized Contributor.

2 Established procedures for sending unsolicited messages to State Identification Bureaus in response to fingerprint submissions from Interstate Identification Index (III) participating states will not be affected.

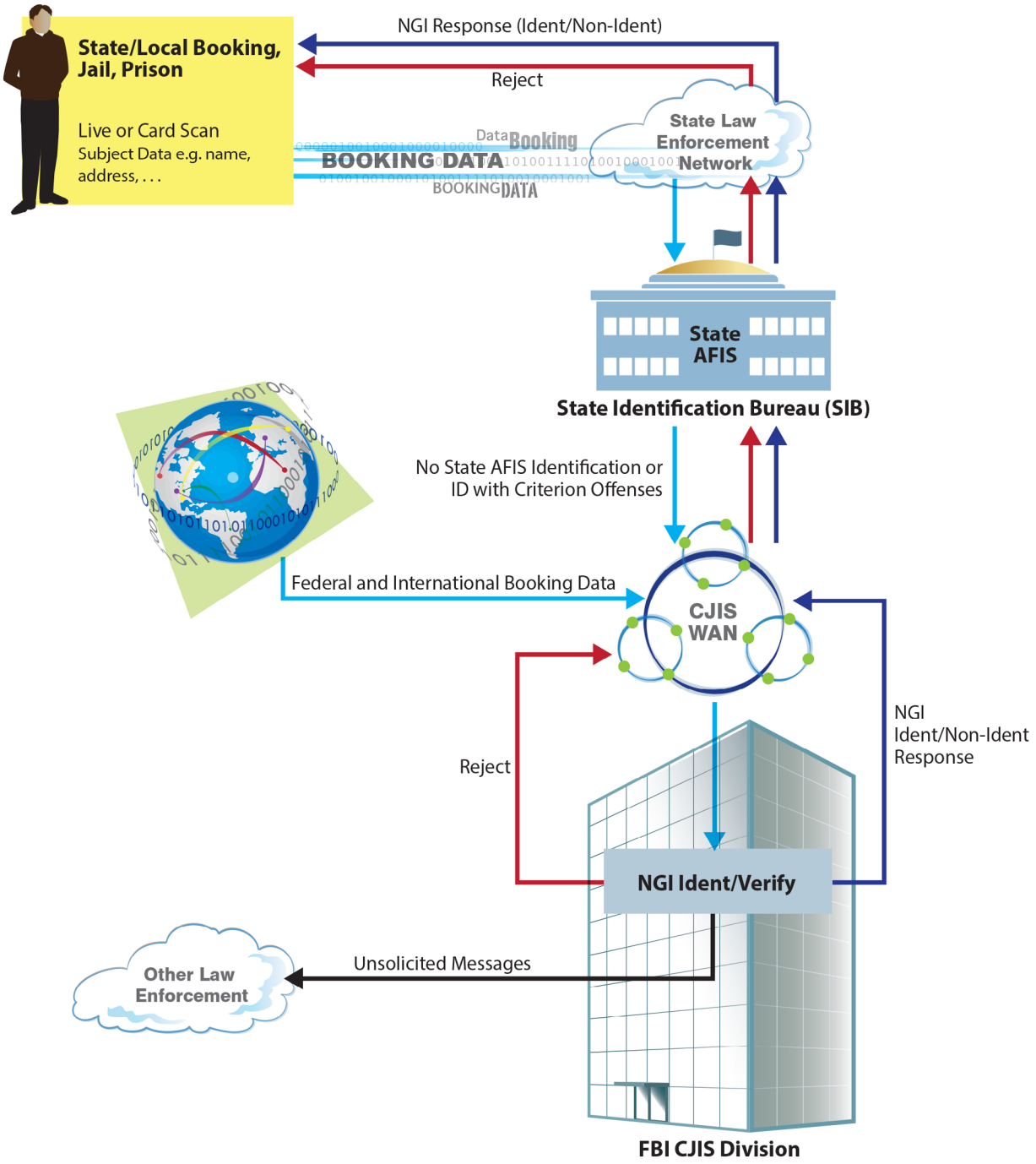

Figure 3 Electronic Fingerprint Identification Submission

3.1.1 Tenprint Fingerprint Identification Submission

The Tenprint Fingerprint Identification submissions consist of criminal and civil transactions. The response time goals for these transactions are specified in Appendix A. In addition to the fingerprint images, the submitter may optionally include palm print, joint/tip print, iris, and face

and/or SMT images of the subject. If the contributor subsequently wishes to add other biometric images to a tenprint search and retain event, they may reference the Event Identifiers (2.2035 EVI) returned in the tenprint response (SRE) described within the Biometric Enrollment Transactions section. The information within a retained submission will be added to an existing record, if a positive identification is made, or will create a new record if no identification was made. If a non-retain submission is not identified, no information will be retained in the FBI/CJIS databases. If a positive identification is made for a non-retain submission, the information on that submission may be added to the existing record and dissemination rules will govern the dissemination of this information.

Many of the tenprint identification submissions may be used to simultaneously establish a Rap Back subscription. Inclusion of the Rap Back subscription fields for a TOT in Table D-1 signifies that the TOT may establish a Rap Back subscription.

Many of the tenprint identification submissions may be used to simultaneously establish a link between an external system identity and an FBI/CJIS identity. The presence of an External Subject Identifier (2.2037 ESI) will establish a link between the provided ESI and the FBI Number/UCN, if the search results in an identification. Coordination between the external system owner and FBI/CJIS must occur before attempting to utilize the external system record linking capability.

Cascaded searches of marked Special Population Cognizant (SPC) Files may be launched along with simultaneous searches of other external systems, such as Canada's Real-Time ID System or DHS IDENT. These will be indicated by the appropriate values for the desired destination in the Name of Designated Repository (2.098 NDR) field in the Type-2 record.

There are several types of electronic fingerprint identification submissions that will be accepted by the FBI/CJIS. The particular type of submission is identified in the Type of Transaction (TOT) field in the Type-1 record for each transaction. The following are the TOTs for identification submissions:

TOT	TRANSACTION
CAR	Criminal Tenprint Submission (Answer Required)
CNA	Criminal Tenprint Submission (No Answer Necessary)
CPDR	Criminal Fingerprint Direct Route
CPNU	Criminal Fingerprint Processing Non-Urgent
DOCE	Departmental Order Channeling Electronic
EMUF	Electronic In/Manual Out User Fee Submission
FANC	Federal Applicant (No Charge)
FAUF	Federal Applicant User Fee
FIDR	Foreign Information Direct Route
FNDR	Federal No Charge Direct Route
NNDR	Non-Federal No Charge Direct Route

TOT	TRANSACTION
NFUE	Non-Federal User Fee Expedite
NFUF	Non-Federal Applicant User Fee
MAP	Miscellaneous Applicant Civil
DEK	Known Deceased
DEU	Unknown Deeased
MPR	Missing Person
AMN	Amnesia Victim

FBI/CJIS's responses to electronic submissions will provide search results or indicate an error via the following TOTs:

TOT	RESPONSE TRANSACTION
SRE	Submission Results - Electronic
ERRT	Tenprint Transaction Error

Error messages are described in Section 3.7

3.1.1.1 Criminal Tenprint Submission (Answer Required) (CAR)

This transaction is a criminal arrest fingerprint submission for which the requester desires an identification decision response. It contains ten rolled and four plain impressions of all ten fingers, biographic descriptor data, as well as information relative to an arrest, custody, or supervisory status. The biographical data and fingerprint images are used to determine potential candidates with criminal records at the FBI/CJIS and a positive identification or non-identification decision is determined. A response is returned to the contributor. The response will always contain the positive identification/non-identification decision and may contain the electronic Identity History Summary, if requested.

This TOT is also used for an inquiry on a criminal suspect or informant, in which case arrest, custody, or supervisory data may or may not be present (Retention Code set to "N"). Requirements for the use of the Arrest Segment Literal (2.047 ASL) and Court Segment Literal (2.051 CSL) fields in these cases are discussed in Appendix C.

3.1.1.2 Criminal Tenprint Submission (No Answer Necessary) (CNA)

This transaction differs from a CAR request only in that no identification decision response is sent. However, a communication protocol acknowledgment will be returned to the contributor to confirm receipt of the transaction. Like the CAR, it contains ten rolled and four plain impressions, and arrest, custody, or supervisory status data. The Retention Code (2.005 RET) for this transaction must be set to "Y."

3.1.1.3 Criminal Fingerprint Direct Route (CPDR)

This transaction consists of a criminal arrest fingerprint submission that will be directly routed to an FBI/CJIS internal log application for special processing. The submission contains ten rolled and four plain impressions, and arrest data. It requires inclusion of the mandatory Type of Search Requested (2.043 TSR) field. The FBI/CJIS will ensure the required EBTS fields and a TSR of "C" are present; otherwise, the submission will be rejected. Please see Appendix C for detailed information of the use of the TSR field.

Note: CPDR is a limited-use TOT that requires coordination with FBI/CJIS prior to use.

3.1.1.4 Criminal Fingerprint Processing Non-Urgent (CPNU)

This transaction is a criminal arrest fingerprint submission which differs from urgent criminal transactions in response time and in online (response) notifications. The submission contains ten rolled and four plain impressions and arrest data. Response due time for this transaction is set to 72 hours to prevent prioritization ahead of urgent criminal or civil submissions.

3.1.1.5 Departmental Order Channeling Electronic (DOCE)

This transaction deals with "Individuals Seeking Their Own Identity History Record Pursuant to DO 556-73." The Channeling Agencies will be responsible for the verification/authentication of the individual requesting the Identity History Summary from FBI/CJIS; no additional verification will occur.

The FBI/CJIS will only accept and process these submissions as electronic, non-retained civil transactions from approved Channeling Agencies. The submission contains ten rolled and four plain impressions, or three identification flat impressions, along with biographic descriptor data. An electronic response will be sent to the Channeling Agency indicating a positive identification, non-identification, or rejection. An Identity History Summary will be returned if the response is a positive identification.

3.1.1.6 Electronic In/Manual Out User Fee (EMUF)

These submissions are for non-criminal justice purposes in which the contributor is charged a fee. The response for this submission is returned to the contributor manually instead of electronically. The submission contains ten rolled and four plain impressions, or three identification flat impressions, along with biographic descriptor data.

When the FBI/CJIS successfully completes processing, it will send an SRE message in response, and print an Identity History Summary and mail it to the requestor. See the Identifying Previous Transactions section for a discussion of the use of Transaction Control Number (1.009 TCN) and Transaction Control Reference (1.010 TCR) in no-charge resubmission of user-fee submissions that the FBI/CJIS has rejected. Such resubmissions are allowed only when the fingerprint image quality of the original submission was unacceptable.

Note: EMUF is a limited-use TOT that requires coordination with FBI/CJIS prior to use.

3.1.1.7 Federal Applicant (No Charge) (FANC)

This transaction pertains to an individual who is fingerprinted in connection with applying for criminal justice employment with the federal government. The submission contains ten rolled and four plain impressions or three identification flat impressions, along with biographic descriptor data. When this TOT is used, there is no charge assessed to the contributor. Federal agencies that are considered "User Fee" contributors must not use this TOT, but use "FAUF" instead (see description below).

3.1.1.8 Federal Applicant User Fee (FAUF)

These submissions are to be used by: (1) any of the branches of the U. S. military in connection with individuals enlisting or being considered for Officers' Candidate School; and (2) federal agencies in connection with employment, security updates, or contract personnel. The submission contains ten rolled and four plain impressions ,or three identification flat impressions, along with biographic descriptor data. See the Identifying Previous Transactions section for a discussion of the use of the Transaction Control Number (1.009 TCN) and Transaction Control Reference (1.010 TCR) in no-charge resubmission of user-fee submissions that the FBI/CJIS has rejected. Such resubmissions are allowed only when the fingerprint image quality of the original submission was unacceptable.

3.1.1.9 Foreign Information Direct Route (FIDR)

This transaction consists of a fingerprint submission from a federal or international agency that will be directly routed to an FBI/CJIS internal log application for special processing. The submission shall contain ten rolled or flat and four plain impressions, or three identification flat impressions, along with biographic descriptor data. If the FIDR is successfully processed, a new identity will be created in the Foreign Subjects of Interest (FSI) repository.

Note: FIDR is a limited-use TOT that requires coordination with FBI/CJIS prior to use.

3.1.1.10 Federal No Charge Direct Route (FNDR)

This transaction consists of an applicant fingerprint submission from a federal agency that will be directly routed to a FBI/CJIS internal log application for processing. The submission contains ten rolled and four plain impressions, or three identification flat impressions, along with biographic descriptor data. The FNDR requires inclusion of the mandatory Type of Search Requested (2.043 TSR) field. The FBI/CJIS will ensure a TSR of "C" is present; otherwise, the submission will be rejected. Please see Appendix C for detailed information of the use of the TSR field.

Note: FNDR is a limited-use TOT that requires coordination with FBI/CJIS prior to use.

3.1.1.11 Non-Federal No Charge Direct Route (NNDR)

This transaction consists of an applicant fingerprint submission from a non-federal agency that will be directly routed to a FBI/CJIS internal log application for processing. The submission contains ten rolled and four plain impressions, or three identification flat impressions, along with biographic descriptor data. The NNDR requires inclusion of the mandatory Type of Search Requested (2.043 TSR) field. The FBI/CJIS will ensure a TSR of "C" is present; otherwise, the submission will be rejected. Please see Appendix C for detailed information of the use of the TSR field.

Note: NNDR is a limited-use TOT that requires coordination with FBI/CJIS prior to use.

3.1.1.12 Non-Federal User Fee Expedite (NFUE)

These non-federal civil applicant submissions are fee-based, high-priority fingerprint transactions that require an expedited search and response. The submission contains ten rolled and four plain impressions, or three identification flat impressions, along with biographic descriptor data. See the Identifying Previous Transactions section for a discussion of the use of the Transaction Control Number (1.009 TCN) and Transaction Control Reference (1.010 TCR) fields in no-charge resubmission of user-fee submissions that the FBI/CJIS has rejected. Such resubmissions are allowed only when the fingerprint image quality of the original submission was unacceptable.

3.1.1.13 Non-Federal Applicant User Fee (NFUF)

These submissions are for non-criminal justice purposes, for which the contributor is charged a fee. The submission contains ten rolled and four plain impressions, or three identification flat impressions, along with biographic descriptor data. Examples of the types of contributors of this type of transaction are federal and state banking institutions and regulatory agencies (such as stock exchanges, bankers' associations, securities dealers, Nuclear Regulatory Commission, Securities and Exchange Commission, racing or gaming control boards, etc.). Their purpose for submitting such requests is to ascertain whether individuals who have applied for employment/volunteer training through the contributor organizations have any past criminal histories. See the Identifying Previous Transactions section for a discussion of the use of Transaction Control Number (1.009 TCN) and Transaction Control Reference (1.010 TCR) fields in no-charge resubmission of user-fee submissions that the FBI/CJIS has rejected. Such resubmissions are allowed only when the fingerprint image quality of the original submission was unacceptable.

3.1.1.14 Miscellaneous Applicant Civil (MAP)

These no-charge submissions are for non-federal law enforcement and criminal justice employment. A submission contains either ten rolled and four plain impressions, or three identification flat impressions, along with biographic descriptor data.

3.1.1.15 Miscellaneous Applicant Civil (Manual Out) (MAPC) - Deprecated on 5/22/18 TOU 9

3.1.1.16 Known Deceased (DEK)

These transactions are submitted for a deceased individual whose identity is known to the contributor. The submission contains either ten rolled and four plain impressions, or three identification flat impressions, along with biographic descriptor data. If the fingerprints are determined to match to those of a subject in the FBI/CJIS criminal files, the subject's FBI/CJIS record will be marked as deceased. The ICO field in this submission may be filled with the text "DECEASED."

3.1.1.17 Unknown Deceased (DEU)

This transaction is submitted with fingerprints obtained from a deceased individual whose identity is not known to the contributor. The submission contains either ten rolled and four plain impressions, or three identification flat impressions, along with biographic descriptor data. If the fingerprints are determined to match to those of a subject in the FBI/CJIS criminal files, the subject's FBI/CJIS record will be marked as deceased and the contributor will be notified of the results. Should no identification result from a search of the criminal file, a search of the civil file will be performed. The subject will be added to the FBI/CJIS database when no identification results.

3.1.1.18 Missing Person (MPR)

These non-criminal submissions pertain to persons reported as missing. The submission contains either ten rolled and four plain impressions, or three identification flat impressions, along with biographic descriptor data. The submission causes a search of the FBI/CJIS files and may result in the placement of a "stop" in FBI/CJIS automated files to alert whenever a future fingerprint submission (of any type) hits against the original set of fingerprints and establishes the person's whereabouts. These subjects are added to the FBI/CJIS database when no identification is made to an existing record. The Action to be Taken (2.071 ACN) field of the response will indicate if a "stop" has been established. The Identification Comments (2.056 ICO) field in this submission may be filled with the text "MISSING PERSON." The Retention Code (2.005 RET) for this transaction must be set to "Y".

3.1.1.19 Amnesia Victim (AMN)

These non-criminal submissions pertain to persons known to have amnesia. The submission contains ten rolled and four plain impressions, or three identification flat impressions, along with biographic descriptor data. The submission causes a search of the FBI/CJIS files and may result in the placement of a "stop" in FBI/CJIS automated files to alert whenever a future fingerprint submission (of any type) hits against the original set of fingerprints and establishes the person's identity. These subjects are added to the FBI/CJIS database when no identification is made to an existing record. The Action to be Taken (2.071 ACN) field of the response will indicate if a "stop" has been established. The Identification Comments (2.056 ICO) field in this submission may be filled with the text "AMNESIA VICTIM." The Retention Code (2.005 RET) for this transaction must be set to "Y".

3.1.1.20 Rap Back Subscription Requests

The NGI's Rap Back Service was developed in response to a need for notification of activity that occurs after the initial processing and retention of fingerprint transactions. The NGI's Rap Back Service provides benefits in two domains of implementation: (a) for non-criminal justice applicants, employees, volunteers, licensees, etc, and (b) for individuals under criminal justice supervision or criminal investigation. A Rap Back Subscription is established by either a retained Tenprint Identification Search request or a Subsequent Subscription request. Subscribers are encouraged to consult the Rap Back Service Policy and Implementation Guide for additional information.

Rap Back Subscriptions may be established through optional Rap Back request fields in the Type-2 record for electronic Tenprint Identification Submissions. Placing a value in the Rap Back Category field indicates to NGI that the Tenprint Identification Submission is also a Rap Back Subscription request. The Rap Back related data in the submission will be processed as a subscription request, and the results will be included in the SRE along with the fingerprint search results. If a Rap Back Subscription is requested for a submission, the agency must also request retention of the fingerprints or the Rap Back subscription will be rejected.

The fields in the following Table have been added to these TOTs for use in establishing Rap Back Subscriptions. The fields in the Table are only applicable when the Tenprint Identification Submission is also being used as a subscription request. If a Rap Back Subscription is requested for a Criminal Submission, the Originating Agency Case Number (2.009 OCA) field is required. For Civil Rap Back Subscriptions, the Rap Back Expiration Date (RBXD 2.2015) is required.

Table 1 Rap Back Subscription Fields used in Tenprint Identification TOTs

EBTS Tag Number	EBTS Element	EBTS Element Name	Mandatory/ Optional	Maximum Occurrences
2.2015	RBXD	Rap Back Expiration Date	Optional	1
2.2020	RBR	Rap Back Recipient	Optional	9
2.2040	RBT	Rap Back Trigger	Optional	40
2.2062	RBNF	Rap Back Activity Notification Format	Mandatory	1
2.2063	RBOO	Opt Out In-State Rap Back Criminal Event Indicator	Optional	1
2.2064	RBUD	Rap Back User-Defined	Optional	10
2.2065	RBC	Rap Back Category	Mandatory	1
2.2067	RBDI	Rap Back Disclosure Indicator	Optional	1
2.2070	RBATN	Rap Back Attention Indicator	Optional	1
2.2071	RBST	Rap Back Subscription Term	Optional	1

For more detailed information on Rap Back Services, see the Rap Back transactions included in the Data Management Service section.

3.1.1.21 Submission Results — Electronic (SRE)

This transaction is returned by NGI in response to identification search submissions. The SRE will contain an identification/non-identification decision; the Event Identifier (2.2035 EVI) for

retained submissions; the electronic Identity History Summary, when requested; and the Rap Back Subscription status, when a Rap Back subscription is requested. The following table describes which Name (2.018 NAM), FBI number/UCN (2.014 FBI), and State Identification Number (2.015 SID) are returned in the SRE for Criminal, Civil and Humanitarian (Unknown Deceased (DEU), Missing Person (MPR), and Amnesia Victim (AMN)) submissions, for both non-identification and identification results. For submissions which result in an identification decision: 1) the Name (2.018 NAM) will be returned in the Submitted Name (2.2008 SNAM) field if there is no match to the Master Name; and/or 2) the Date of Birth (2.022 DOB) will be returned in the Submitted Date of Birth (2.2007 SDOB) field if there is no match to the Master DOB. The following fields, which are not stored at FBI/CJIS, are always returned as submitted: Attention Indicator (2.006 ATN), Send Copy To (2.007 SCO), Employer and Address (2.039 EAD), Occupation (2.040 OCP), Residence of Person Fingerprinted (2.041 RES), and Treat as Adult (2.087 TAA). A single electronic response will be sent to the contributor through the State Identification Bureau via the CJIS WAN.

Identification Service transactions may trigger a separate search of external systems via use of multiple values in the Type-2 record Name of Designated Repository (2.098 NDR) field. Contributors will receive multiple SRE transactions when external systems are searched. The Transaction Control Reference (1.010 TCR) field in the Type-1 header record of the SRE will contain the Transaction Control Number (1.009 TCN) value from the Type-1 header record of the submission to enable correlation of the search responses.

Table 2 Values of NAM, FBI Number/UCN and SID Returned in the SRE

Type of Submission	Result	Value of Returned Field			Special Exceptions
		Name	FBI Number/ UCN	SID	
Criminal, No FBI Number/UCN Submitted	Non-Ident Non-Retain	NAM Submitted	None	Submitted SID	
Criminal, No FBI Number/UCN Submitted	Non-Ident Retain	NAM Submitted	Master FBI Number/UCN	Submitted SID	
Criminal, No FBI Number/UCN Submitted	Ident Non-Retain	Master NAM	Master FBI Number/UCN	Master SID	
Criminal, No FBI Number/UCN Submitted	Ident Retain	Master NAM	Master FBI Number/UCN	Master SID	
Criminal, FBI Number/ UCN Submitted	Non-Ident Non-Retain	NAM Submitted	None	Submitted SID	STD in ERS
Criminal, FBI Number/ UCN Submitted	Non-Ident Retain	NAM Submitted	Master FBI Number/UCN	Submitted SID	STD in ERS
Criminal, FBI Number/ UCN Submitted	Ident Non-Retain	Master NAM	Master FBI Number/UCN	Master SID	STD in ERS
Criminal, FBI Number/ UCN Submitted	Ident Retain	Master NAM	Master FBI Number/UCN	Master SID	STD in ERS
Civil, No FBI Number/ UCN Submitted	Non-Ident Non-Retain	NAM Submitted	None	None	
Civil, No FBI Number/ UCN Submitted	Non-Ident Retain	NAM Submitted	UCN	None	
Civil, No FBI Number/ UCN Submitted	Ident Non-Retain	Master NAM	Master FBI Number/UCN	Master SID	

Type of Submission	Result	Value of Returned Field			Special Exceptions
		Name	FBI Number/ UCN	SID	
Civil, No FBI Number/ UCN Submitted	Ident Retain	Master NAM	Master FBI Number/UCN	Master SID	
Civil, FBI Number/UCN Submitted	Non-Ident Non-Retain	NAM Submitted	None	None	STD in ERS
Civil, FBI Number/UCN Submitted	Non-Ident Retain	NAM Submitted	UCN	None	STD in ERS
Civil, FBI Number/UCN Submitted	Ident Non-Retain	Master NAM	Master FBI Number/UCN	Master SID	STD in ERS
Civil, FBI Number/UCN Submitted	Ident Retain	Master NAM	Master FBI Number/UCN	Master SID	STD in ERS
Humanitarian, No FBI Number/UCN Submitted	Non-Ident	NAM Submitted	Master FBI Number/UCN	None	
Humanitarian, No FBI Number/UCN Submitted	Ident	Master NAM	Master FBI Number/UCN	None	
Humanitarian, FBI Number/UCN Submitted	Non-Ident	NAM Submitted	Master FBI Number/UCN	None	STD in ERS
Humanitarian, FBI Number/UCN Submitted	Ident	Master NAM	Master FBI Number/UCN	None	STD in ERS

Under certain circumstances, the ERS field in the SRE will contain Special Table Data (STD) explaining the special circumstance. For example, an STD would be included if the Identity for the submitted UCN is marked in NGI as expunged, deleted, or consolidated. The MSG field is added to notify the contributor of several warning activities that occurred with their transaction, such as when certain biometric sets could not be validated and were not enrolled. Currently defined external messages are detailed in Appendix M.

If a Rap Back Subscription was requested, the SRE will contain all Rap Back Subscription Data Fields to ensure the Rap Back Subscription Owner is aware of any system modifications that were made to the Subscription. The response will indicate if the Rap Back Subscription was established with changes, with an indication of the field changed. Also, the response will indicate if a search was successful but the Rap Back Subscription was unable to be created.

If the contributor subsequently performs maintenance on a tenprint search and retain event, they may reference the EVI from the SRE tenprint response within the specific maintenance transaction TOT as described in the appropriate section of this document. The SRE will also provide the Biometric Image Enrollment set field (2.2061 BIE) and the Biometric Image Available (2.2031 BIA) field. The BIE field will provide the Biometric Set Identifier (2.2061A BSI) and Image Type (2.2061B IMT) of each biometric set that was enrolled from the incoming identification transaction. Where photos are enrolled, the Subject Pose (2.2061C POS) is populated for facial photos, and the Scars, Marks, and Tattoos (2.2061D SMT) field is populated for SMT photos. If the identification transaction results in identification to an existing FBI Number/UCN (2.014 FBI), the BIA field is returned in the SRE to indicate what biometric types (reference BIA Values Table in Appendix C) are on file for the identity, in support of future image requests (IRQs) by the user.

3.1.1.22 Tenprint Transaction Error Response (ERRT) (Future Capability - effective 10/2018)

When a Tenprint Transaction Error Response (ERRT) is sent in response to an identification search submission, the Name (2.018 NAM) and Date of Birth (2.022 DOB) from the search submissions are returned as the Submitted Name (2.2008 SNAM) and Submitted Date of Birth (2.2007 SDOB), respectively. Error responses are listed in the Error Message Format Section (Section 3.7).

3.1.2 Latent Fingerprint Identification Submission

The Electronic Latent Fingerprint Identification submission to NGI will originate from the FBI Field Office having legal jurisdiction of the case. This submission is strictly for the purpose of submitting crime scene information to the FBI/CJIS for processing in support of law enforcement identification, which differentiates it from latent investigation search submissions. The crime scene evidence will be processed and the desired latent prints will be electronically captured. The term "latent prints" includes fingerprints, palm prints, and supplemental fingerprints. Investigation of latent cases may also generate tenprints used for comparison purposes (e.g., suspect, victim, and other personnel with authorized access to the crime scene). NGI is expanding the use of this submission to allow for tenprint fingerprint images to be submitted with this transaction, in order to take on the functionality of the discontinued Compare Fingerprint Submission (CFS) and Evaluation Report (ELR) TOTs. These submissions will trigger cascaded searches of marked Special Population Cognizant (SPC) files after a response has been provided to the Authorized Contributor. These submission TOTs are summarized in Appendix D with the field edit specifications found in Appendix C.

The particular type of submission will be identified in the Type of Transaction (TOT) field in the Type-1 record. The TOT for Latent Fingerprint Identification submission is:

TOT	TRANSACTION
LFS	Latent Fingerprint Image Submission

The FBI/CJIS's responses to electronic submissions will provide search results or indicate an error via the following TOTs:

TOT	RESPONSE TRANSACTION
LSR	Latent Submission Results
ERRL	Latent Transaction Error

Error messages are described in Section 3.7

3.1.2.1 Latent Fingerprint Image Submission (LFS)

A Latent Fingerprint Image Submission (LFS) is used by FBI Field Offices to submit friction ridge

images to latent specialists, which may or may not be searched by the latent specialist against NGI. The latent and/or known fingerprint images are transmitted along with the search criteria by the originator. FBI Laboratory Latent Fingerprint Specialists will perform comparisons of the submitted friction ridge images against the candidate(s) selected and make the Identification/Non-Identification/Inconclusive decision(s). The Identification/Non-Identification/Inconclusive decision(s) will be transmitted as a Latent Submission Results response (LSR). If a latent search image was provided, it may be stored in the ULF if requested in the submission by the originator, independent of the results of the search.

3.1.2.2 Latent Submission Results (LSR)

This transaction is in response to a LFS. It includes a Search Results Findings (2.059 SRF) field indicating the Identification/Non-Identification/Inconclusive decision. If the LFS results in an identification decision, it returns a Subject Name (2.018 NAM), FBI Number/UCN (2.014 FBI), and an Identity History Summary (2.075 ERS) of the identified subject. The new Biometric Image Available (2.2031 BIA) field is added to reflect the biometric image types available for the Identity. If the contributor needs to retrieve the biometric images, they can be requested via the Biometric Image/Feature Retrieval Request (IRQ).

3.1.3 Rapid Fingerprint Identification Search Submission

The Rapid Search functionality provides the ability to perform an identification search against a repository with a limited population. This results in a significantly reduced response time in comparison to Tenprint Fingerprint Identification Search response times. These Rapid Fingerprint Identification Search Submissions are directed against the Repository for Individuals of Special Concern (RISC), which contains records for Wanted Persons, Immigration Violators, Known or Appropriately Suspected Terrorists, Sexual Offender Registry Subjects, and other persons of special interest. Rapid Search functionality has been expanded to include searching the criminal repository by authorized agencies. These transactions will initiate a cascaded search of the ULF and certain Special Population Cognizant (SPC) files after a Rapid Search response has been provided to the Authorized Contributor.

The following TOT will be accepted by the FBI/CJIS for Rapid Fingerprint Identification Search Submissions:

TOT	TRANSACTION
RPIS	Rapid Fingerprint Identification Search

The FBI/CJIS's responses to electronic submissions will provide search results or indicate an error via the following TOTs:

TOT	RESPONSE TRANSACTION
RPISR	Rapid Fingerprint Identification Search Response
ERRT	Tenprint Transaction Error

Error messages are described in Section 3.7

3.1.3.1 Rapid Fingerprint Identification Search (RPIS)

These Rapid Searches are submitted to NGI to perform the rapid fingerprint search of the FBI/CJIS's RISC repository. RISC provides the capability to perform a Rapid Fingerprint Identification Search (RPIS) against the RISC subjects of heightened interest warranting more rapid responses to inquiries. The transaction allows the user to request a full Identity History Summary (2.075 ERS) as an optional return element. RPIS also allows the user to request a facial photo be returned.

When the Name of Designated Repository (2.098 NDR) field contains values of 6 (all of RISC), 11 (Wants and Warrants), 12 (Sexual Offender Registry), 13 (Known or Suspected Terrorists) or 15 (Persons of Special Interest), the submission must contain at least two finger images; either two to ten rolled impressions, or a set of one to four identification flat impressions, along with optional biographic data. When NDR value of 1 (Criminal Master File) is used, the submission must have ten finger images, with the Amputated or Bandaged (2.084 AMP) field being provided for those images not included, along with optional biographic descriptor data.

Note: RPIS is a limited-use TOT that requires coordination with FBI/CJIS prior to use.

3.1.3.2 Rapid Fingerprint Identification Search Response (RPISR)

Rapid Fingerprint Identification Search submissions will provide a rapid response to searches from authorized agencies. The format of the response varies depending on the Repository searched.

When the RPIS search is directed against the RISC repositories, the Rapid Fingerprint Identification Search Response (RPISR) will consist of a Red/Yellow/Green indicator in the Search Results Findings (2.059 SRF) field corresponding to the match results against the RISC. A Red response indicates identification of a highly probable candidate in the RISC. However, a Red response is not to be considered a positive identification, but rather the candidate score from the RISC search indicates a high likelihood of identification. It is recommended agencies submit a full tenprint fingerprint submission for positive identification. A Yellow response is a possible hit, indicating identification of a probable candidate (or candidates) in the RISC which is below the level of confidence established for a highly probable match (Red response) but above the level that excludes the possibility of a potential candidate (Green response). The Yellow response may only be used as an investigative tool providing leads for further investigative inquiries. A Green response indicates the search did not locate a viable candidate in the search repository.

For Red and Yellow responses, the Supplementary Identity Information (2.2023 SII) field may be returned and will contain important officer safety information such as Warrants, Offenses, and Caution codes from NCIC. In addition, the Action to be Taken (2.071 ACN) field may also be returned to indicate recommendations for further actions. When requested, the most recent full frontal photo for each candidate will also be returned, if available. The RPISR transaction may include full Identity History Summary data in the Electronic Rap Sheet (2.075 ERS) field for any returned candidates, if requested. The return of the full Identity History Summary may increase the response time service level. No fingerprint images will be returned for the Rapid Fingerprint Identification Search Response.

If two candidates are returned, a separate Type-2 record will be included for each candidate. The FBI Number/UCN (2.014 FBI), Name (2.018 NAM), Place of Birth (2.020 POB), Status/Error Message (2.060 MSG), Electronic Rap Sheet (2.075 ERS), and Supplementary Identity Information (2.2023 SII) fields will hold information unique to each candidate. In addition, the FBI Number/ UCN (2.014 FBI) field of the first Type-2 record will contain a second occurrence that holds the FBI Number of the candidate in the second Type-2 record for reference.

When the RPIS search is directed against the criminal repository, the SRF field is populated with either an "R" for Red indicating that a potential criminal match has been found or a "G" for Green indicating that no disseminable match has been found. Red responses will include an FBI Number/ UCN. It is expected a Red indicator response will be followed by a separate Tenprint Fingerprint Identification request message to confirm the identity of the subject.

3.1.4 Disposition Fingerprint Submission

The Disposition Fingerprint Submission allows an Authorized Contributor to submit fingerprints with disposition information to the FBI/CJIS.

The following TOT will be accepted by the FBI/CJIS for Disposition Fingerprint Submissions:

TOT	TRANSACTION
FDSP	Electronic Fingerprint Disposition Submission

The FBI/CJIS response to electronic submissions will provide search results or indicate an error via the following TOTs:

TOT	RESPONSE TRANSACTION
SRE	Submission Results - Electronic
ERRT	Tenprint Transaction Error

Error messages are described in Section 3.7

3.1.4.1 Electronic Fingerprint Disposition Submission (FDSP)

The FDSP allows an Authorized Contributor to submit fingerprints with disposition information. The disposition information within the submission will be added to an existing record, if a positive identification is made, or will create a new record if no identification is made. The submitter may optionally include supplemental (joint, tip) fingerprint images, palm print images, and up to 25 photos of the subject. The Court Segment Literal (2.051 CSL) or disposition data may be obtained from the arresting agency, the court system, the penal system, or any other local, state, or federal entity that may render final adjudication in a criminal case. The response to a valid FDSP is an SRE.

The Disposition File Maintenance Submission (DSPE) may be used to submit disposition information on an existing identity (2.014 FBI) without fingerprints and is described in the Data Management Service section.

3.1.5 Iris Identification Search Submission (Future Capability)

Iris Identification Search Submissions allow the user to submit a one-to-many identification search against the FBI/CJIS Iris Identification File (IIF) using an Iris image as the search probe.

The following TOT will be accepted by the FBI/CJIS for Iris Identification Search Submissions:

TOT	TRANSACTION
IIDS	Iris Image Identification Submission

The FBI/CJIS responses to electronic submissions will provide search results or indicate an error via the following TOTs:

TOT	RESPONSE TRANSACTION
SRE	Submission Results – Electronic
ERRB	Biometric Search Error

Error messages are described in Section 3.7

3.1.5.1 Iris Image Identification Submission (IIDS) (Future Capability)

The Iris Image Identification Submission (IIDS) transaction allows the user to submit the right or left iris image for a given individual to be used for searching against the IIF for a possible match. All searches of the IIF are one-to-many searches. An IIDS that results in a score better than a predetermined match threshold is deemed a match (i.e., a highly probable identification). In the event of a match, information pertaining to the matched individual is returned in an SRE transaction. By default, IIDS searches that result in a match do not return any images. If the IIDS contains any errors, an ERRB is returned.

The Supplementary Identity Information (2.2023 SII) field may be returned and will contain important officer safety information such as Warrants, Offenses, and Caution codes from NCIC. The response may also contain the Identity History Summary (2.075 ERS), if requested.

Iris image search functionality is currently in the pilot phase. Therefore the IIDS is a limited use TOT that requires coordination with the FBI/CJIS prior to use.

3.2 Verification Service

This service provides user support for requests for specific biometric verification on an individual. It allows a user to submit a request to verify an identification of an individual by providing a unique identifier and fingerprint image. This Verification Service results in the confirmation of an individual's Identity based on a one-to-one comparison. The following are the TOTs for Verification submissions:

TOT	TRANSACTION
FVR	Fingerprint Verification Request

The FBI/CJIS response to electronic submissions will provide search results or indicate an error via the following TOTs:

TOT	RESPONSE TRANSACTION
SRE	Submission Results - Electronic
ERRT	Tenprint Transaction Error

Error messages are described in Section 3.7

3.2.1 Fingerprint Verification Request (FVR)

These submissions will be used to verify the identity of a subject against a known FBI Number/UCN in the FBI/CJIS files. Submissions will include a quoted UCN and shall include a minimum of two fingerprint images, either flat or rolled, contained in one to fourteen image records as detailed in Table L-2 of Appendix L. If the quoted UCN is not found, an error message (ERRT) will be returned.

3.2.2 Fingerprint Verification Response (SRE)

This transaction is returned by the FBI/CJIS in response to a Fingerprint Verification request. A Match response will be returned when the images on file for the submitted FBI Number/UCN (2.014 FBI) match the submitted images and will contain the electronic Identity History Summary (2.075 ERS), if requested. A No Match response will be returned when the images submitted do not match the images on file for the quoted UCN. Table 3 "Values of NAM, FBI Number/UCN and SID Returned in the SRE for FVR" describes which NAM, FBI Number/UCN, and SID are returned in the SRE for the Fingerprint Verification request. For further information, please refer to the Identification Services section, Submission Results – Electronic (SRE) subsection.

Table 3 Values of NAM, FBI Number/UCN and SID Returned in the SRE for FVR

Type of Submission	Result	Value of Returned Field			Special Exceptions
		Name	FBI Number/UCN	SID	
Fingerprint Verification Request	Match	Master NAM	Master FBI Number/ UCN	Master SID	
Fingerprint Verification Request	No Match	NAM Submitted	None	Submitted SID	STD in ERS

3.3 Information Service

This service provides user support for requests for specific biometric or biographic information for individuals by specifying a unique identifiers. Appendix E provides a summary of the Information

Service transactions with the Type-2 fields that are optional and mandatory. Appendix C contains the detailed information for each of the Type-2 fields.

3.3.1 Biometric Image Retrieval Submission

The Biometric Image Retrieval Submission is used for requesting images on file at the FBI/CJIS. To initiate a request for image(s) from the NGI database, the sending agency electronically transmits the unique record identifier of the subject (e.g., FBI number/UCN). To retrieve ULF images, the contributor should provide the UCN of the ULF record in the FBI Number/UCN field (2.014 FBI). This request will be routed to the FBI/CJIS, processed, and returned to the requester through the CJIS WAN. If the requester is a local agency, the request and response will be routed via the CJIS WAN through the state law enforcement network. There will be no manual intervention on the part of the FBI/CJIS.

The processing flow for image requests is illustrated in the figure Biometric Image Retrieval Submission.

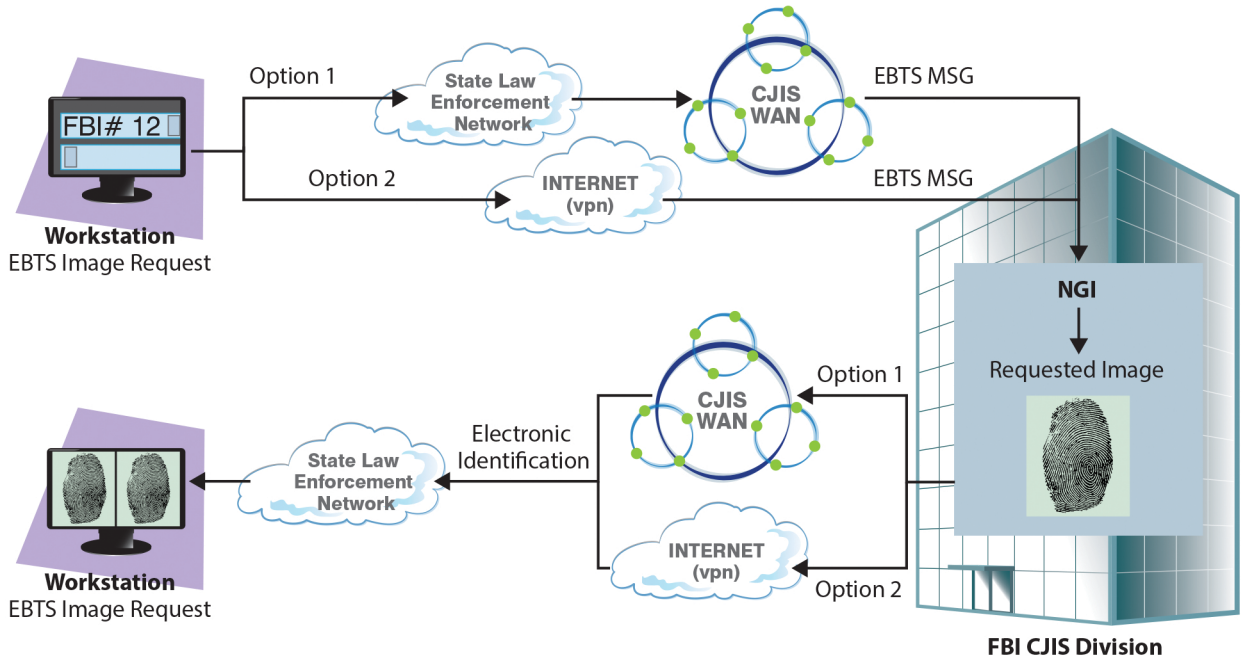

Figure 4 Biometric Image Retrieval Submission

As a Biometric Image/Feature Retrieval Request transaction (IRQ) could request images for multiple individuals by including a list of identifiers, the FBI/CJIS will respond with an Image Summary Response (ISR) listing all requested identifiers and each corresponding response status after completing the individual retrievals and Image Request Responses (IRR).

The following TOTs are applicable for requests for images:

TOT	TRANSACTION
IRQ	Biometric Image/Feature Retrieval Request

The FBI/CJIS response to requests for images will provide search results or indicate errors via the following TOTs:

TOT	RESPONSE TRANSACTION
IRR	Image Request Response
ISR	Image Summary Response
ERRI	Information Transaction Error

Error messages are described in Section 3.7

To initiate a request for a photo set from NGI, the sending agency electronically transmits the FBI Number/UCN and optionally, a Date of Arrest (2.045 DOA) for criminal records. This request will be routed via the CJIS WAN to NGI, processed, and returned to the requester.

If the requester is a local agency, the request and response will be routed to the CJIS WAN through the state law enforcement network.

In support of existing systems that have not been upgraded for NGI, requests for photos may still be submitted to the FBI/CJIS using the CPR (Subject Photo Request) TOT. The response TOT of Photo Request Response (PRR) will contain the most recent frontal photo if no DOA is provided in the photo request. Photo retrievals may also be done using the Biometric Image/ Feature Retrieval Request (IRQ) transaction. The IRQ provides additional photo query capabilities and is the recommended TOT for photo retrieval.

The following TOTs are applicable only for legacy requests for Criminal Subject Photo Images:

TOT	TRANSACTION
CPR	Subject Photo Request

The FBI/CJIS response to requests for Criminal Subject Photo set images is:

TOT	RESPONSE TRANSACTION
PRR	Photo Request Response
ERRI	Information Transaction Error

Error messages are described in Section 3.7

3.3.1.1 Biometric Image/Feature Retrieval Request (IRQ)

This transaction enables users to retrieve images from the FBI/CJIS databases so a comparison can be made by the requester at user facilities. The requester identifies the subjects whose biometric images are being requested. The requester may also include additional parameters to specify particular modalities or image types of the subjects. Up to 1,000 subject records may be requested per transaction. Specific fingerprint, supplemental fingerprints, palm print images or the complete set may be requested. Other images, such as facial and SMT photos which are associated with the records, may also be requested. The transaction will be processed, and requested images on file at the FBI/CJIS will be transmitted in the response. Each subject record identifier number in the request and each set of biometrics being returned for the subject will be addressed in a separate Image Request Response (IRR).

Alternately, this transaction may be used to request images from external repositories. The Name of Designated Repository (2.098 NDR) field is added to IRQ where only a single external system value is valid. The Biometric Image Description (2.2028 BID) field information item UCN (2.2028A) has been changed to Subject Identifier (SI) in order to support external system identifiers.

If the request contains any invalid field values or is missing any required fields, an Information Transaction Error (ERRI) will be returned, including the reason for the return in the Status/Error Message (2.060 MSG) field. Errors associated with individual subject identifier numbers, such as an image set not being on file, will be reported in the MSG field of the Image Summary Response (ISR).

The following biometric and descriptive record types may be retrieved:

1. Tenprint FP Images from an Event using the Biometric Set Identifier (2.2029 BSI)
2. Tenprint FP Features associated with a retrieved image
3. Palm Print Images from an Event using the Biometric Set Identifier (2.2029 BSI)
4. Palm Print Features associated with a retrieved image
5. Supplemental (joint and tip) Prints from an Event using the Biometric Set Identifier (2.2029 BSI)
6. Supplemental (joint and tip) Features associated with a retrieved image
7. Latent Friction Ridge images and associated Features
8. Facial Photos
9. SMT Photos

In order to support multiple biometric sets and multiple image types for an identity, a new field, the Biometric Image Description (2.2028 BID), has been created. If the new BID field is populated, then the FBI Number/UCN (2.014 FBI) and Finger Numbers Requested (2.057 FNR) fields will be ignored; therefore, UCN and FNR are optional. The BID field is a set type that allows users greater flexibility in defining what images are requested. Please see Appendix C, Type-2 Element Data Dictionary, for a full description of the use of BID.

The submitter may indicate the desire for CJIS to return the Type-9 features records associated

with friction ridge images in the Request Features Record (2.095 RFR) field. The Type-9 features records may be used for comparison purposes by overlaying the features on the image records. For IRQ transactions requesting multiple sets of images, the request to return features records applies to all identified sets of friction ridge images. Separate IRQ transactions may be submitted if features are desired for some but not all friction ridge image sets.

3.3.1.2 Subject Photo Request (CPR)

This TOT enables users to retrieve a photo set of Type-10 records from the NGI repository. Each set of photos may consist of photos of a subject posed from different views and/or Scars/Marks/Tattoos. Each photo set for an identity record is linked to the subject by the Date of Arrest (2.045 DOA). The most recent frontal photo will be returned in the request by default.

The transaction will be processed, and the requester-selected photo set on file at the FBI/CJIS will be transmitted in the response. If the request contains any errors, the Response Code (2.082 REC) field will be set to "N." A Photo Request Response (PRR) will be returned, including the reason for the rejection in the Response Explanation (2.080 EXP) field.

3.3.1.3 Image Request Response (IRR)

This transaction is returned by the FBI/CJIS to provide requested images on file at the FBI/CJIS, or the specified external system, to the requester. Each image set identified in the IRQ request will cause a separate IRR response. The response will include either the subject record identifier number (2.014 FBI) or the External Subject Identifier (2.2037 ESI) and the requested image set in the format in which they were enrolled.

The IRR response will return one biometric image set, along with the associated biometric feature set, if requested. The new Biometric Image Available (2.2031 BIA) field is added to reflect the biometric image types available for the Identity. The IMT field in the IRR corresponds to the IMT within the BID field in the request (for composite results, where no BSI is provided in the request) or is equivalent to the image type of the BSI requested (for event results, where BSI is included in the request). When a composite set is returned, no Biometric Set Identifier (2.2029 BSI) is returned in the message.

3.3.1.4 Image Summary Response (ISR)

This transaction is returned by the FBI/CJIS to summarize the results of the IRQ request processing. This transaction contains the listing of each subject identifier number whose imagery was successfully returned in either the FBI Number/UCN (2.014 FBI) field or the External Subject Identifier (2.2037 ESI) field. The length of this list corresponds with the number of IRRs returned in response to a given IRQ. For each subject record identifier for which images were not returned due to invalid subject record identifier number or image not on file, the subject identifier and the appropriate error message are returned in the Status/Error Message (2.060 MSG) field.

New fields will be used to inform the user of all the identity's biometric sets that were returned

when the IRQ contained the Biometric Image Description (2.2028 BID) field. New fields added to the message are the Image Type (2.062 IMT) to specify the type of biometric set returned, and Biometric Set Identifier (2.2029 BSI) to specify the exact biometric set returned if the set is not a composite set. The subject UCN and the SID, IMT, and BSI fields are all presented in the same order, such that each occurrence of the field corresponds with the same ordered element of the other fields (e.g., the third UCN/SID listed corresponds to the third instance of the IMT and the third instance of the BSI).

3.3.1.5 Photo Request Response (PRR)

Each Subject Photo Request (CPR) will receive a Photo Request Response (PRR). Along with the requested photos, this transaction indicates the condition of each request. If the request contains any errors FBI/CJIS will return the following values: FBI=0000000; CRI=XXXXXXXXX; REC="N"; EXP= message code of the first detected error.

3.3.2 Biometric Audit Trail Retrieval Submission

These transactions enable users to retrieve audit trail information for their images stored in the NGI database. The audit information consists of: the agencies which have received the specified images, when the images were transmitted, and for what reason. The requester provides the Subject Identifier (2.014 FBI) and the Biometric Set Identifier (2.2029 BSI) for the image set for which they want audit trail information returned. If the Biometric Set Identifier is not included, then the UCN is mandatory, and the request will encompass all the biometric sets for the UCN which are owned by the submitter. The owner is defined as the Controlling Agency Identifier (2.073 CRI) who enrolled the image or the State Bureau for the CRI.

The following are the TOTs for Biometric Audit Trail Retrieval Submission:

TOT	TRANSACTION
BATQ	Biometric Audit Trail Query

The FBI/CJIS response to electronic submissions will provide search results or indicate an error via the following TOTs.

TOT	RESPONSE TRANSACTION
BATR	Biometric Audit Trail Response
ERRI	Information Transaction Error

Error messages are described in Section 3.7

3.3.2.1 Biometric Audit Trail Query (BATQ)

This transaction is used to retrieve the Audit Trail for either a specific biometric set or multiple biometric sets for an identity or latent record. An Audit Trail is defined as the details of the disseminations of a biometric image.

For each request, the submitter of the transaction shall specify what image audit trails that FBI/CJIS will return. The main selection criteria are the FBI Number/UCN (2.014 FBI) to specify the Identity or latent record, Biometric Set Identifier (2.2029 BSI) to request a specific biometric set, and Image Type (2.062 IMT) to specify the image types. Only a record owner (contributor) is allowed to request an audit trail: a transaction error is returned if anyone other than the owner tries to request it.

When IMT is provided without BSI, audit details are returned for all of the biometric sets of type IMT that are owned by the requestor for the specified Identity or latent record (UCN). When BSI and IMT are not provided, the audit trail details returned will consist of all biometric sets owned by the requestor for the specified Identity or latent record.

The response to this request will be Biometric Audit Trail Response (BATR).

3.3.2.2 Biometric Audit Trail Response (BATR)

This transaction is returned by the FBI/CJIS to provide the audit trail record to the requester. This message contains details of when and how the biometric sets specified in a BATQ have been disseminated. If images from the requested biometric set have not been disseminated, a successful BATR is returned, but it will not have any instances of audit trail data.

The Audit Trail Data is returned in the Audit Trail Record (2.2032 ATR) field which contains the Biometric Set Identifier of the image, the Image Type, and Finger Positions (when the complete set is not returned) for each requested image. Please refer to Appendix C, Type-2 Data Dictionary, for the complete list of the Audit Information returned in an ATR. If the max occurrence of the ATR is reached, the Status/Error Message (2.060 MSG) field will be populated, informing the user.

3.3.2.3 Information Transaction Error (ERRI)

If the requestor does not own any of the images selected by the Biometric Audit Trail Query (BATQ) request criteria, this will result in an Information Transaction Error (ERRI), including the reason for the error in the Status/Error Message (2.060 MSG) field. An ERRI is also generated if the submitted Biometric Set Identifier (2.2029 BSI) or Image Type (2.062 IMT) is not associated with the submitted FBI Number/UCN (2.014 FBI). Error responses are described in the Error Message Format Section (Section 3.7).

3.3.3 Rap Back Information Retrieval Submission

This service provides Rap Back Subscribers the ability to retrieve their Rap Back Subscription Information. The following are the TOTs for Rap Back Information Retrieval submissions:

TOT	TRANSACTION
RBRPT	Rap Back Subscription List Request
RBIHS	Rap Back Identity History Summary Request

The FBI/CJIS's responses to electronic submissions will provide search results or indicate an error via the following TOTs:

TOT	RESPONSE TRANSACTION
RBRPTR	Rap Back Subscription List Response
RBIHSR	Rap Back Identity History Summary Response
ERRI	Information Transaction Error

Error messages are described in Section 3.7

For more detailed information on Rap Back Services, see the Rap Back transactions included in the Data Management Service section.

3.3.3.1 Rap Back Subscription List Request (RBRPT)

The Rap Back Subscription List Request is used when a Rap Back Subscription owner wants to retrieve a list of all Identities for whom they have NGI Rap Back Subscriptions, and their statuses. The Rap Back Subscription List can be requested by the Rap Back Subscriber, or the State Bureau or other Submitter for the Controlling Agency Identifier (2.073 CRI). The Subscription Owner is defined as the CRI that subscribed to the Identity (CRI1). The State Bureau will have the option to request all Rap Back Subscriptions which were routed through the state (i.e., the establishing ORI on the incoming submission) via the Request All Records (2.2047 RAR) field. Filtering parameters for this transaction include Rap Back Subscription Identifier (2.2048 RBSI), Rap Back Notification Recipients (2.2020 RBR), and Expiration Date Range (2.2068 DTR).

3.3.3.2 Rap Back Subscription List Response (RBRPTR)

The Rap Back Subscription List Response returns the submitted filtering parameters and a list of Subscriptions that match them. If the Rap Back Subscription List (2.2050 RBSL) exceeds 10MB or 10,000 Rap Back Subscriptions then the request is rejected with an ERRI. In this case, the user should increase the filtering parameters of the requested report or should contact their FBI/CJIS representative for other subscription list report options.

3.3.3.3 Rap Back Identity History Summary Request (RBIHS)

This transaction provides a Rap Back Subscription Owner the ability to request an Identity History Summary for an individual subscribed in the Rap Back Service, using the Rap Back Subscription Identifier (2.2048 RBSI) and the Rap Back Activity Notification Identifier(s) (2.2041 RBNI), provided within Rap Back Activity Notifications (RBN). The RBNI is used to return the event which triggered each RBN.

3.3.3.4 Rap Back Identity History Summary Response (RBIHSR)

This transaction is returned in response to a Rap Back Identity History Summary Request. The Identity History Summary (2.075 ERS) provided in the response is the standard Identity History

Summary with all the standard response generation rules applied. The response will also contain the triggering event data.

3.4 Investigation Service

To conduct an investigation search of the FBI/CJIS's repositories, sending agency transactions will electronically transmit biometric images, with or without corresponding image features, and/or biographic descriptors as required by the applicable investigative TOT. The submission will be searched automatically. If candidates are identified, no identification decision is made by the FBI/CJIS. Instead, up to 99 candidate UCNs are returned to the transmitting agency, along with biometric images for the first occurrence of each UCN in the candidate list. Appendix E provides a summary of the Investigation Service transactions with the Type-2 fields that are optional and mandatory. Appendix C contains the detailed information for each of the Type-2 fields.

3.4.1 Tenprint Fingerprint Investigation Submission

The tenprint investigation process differs from electronic tenprint identification submission processing in that there is no manual intervention on the part of the FBI/CJIS.

The following list of TOTs is applicable to tenprint searches transmitted to the FBI/CJIS:

TOT	TRANSACTION
TPIS	Tenprint Fingerprint Image Search
TPRS	Tenprint Rap Sheet Search

A hierarchical approach to tenprint searches must be adhered to for TPIS. Submissions by local agencies must be processed by the local AFIS (if available) and electronically transmitted to a state AFIS (if available) before being submitted to the FBI/CJIS. If an identification decision is made at any of the previous levels, the identification response will be transmitted to the originating agency and there will be no further processing of the request at a higher level.

The processing flow for Tenprint Fingerprint Image Search (TPIS) submissions is shown in Figure 5, "Investigation Fingerprint Submissions."

All electronic transactions between the FBI/CJIS and the originating state agency will be routed via the CJIS WAN. State and local agencies must handle the continuance of these transactions among themselves through their state network. For OFOs, tribal, or international agencies, routing of search and response will be via their connection to the CJIS WAN.

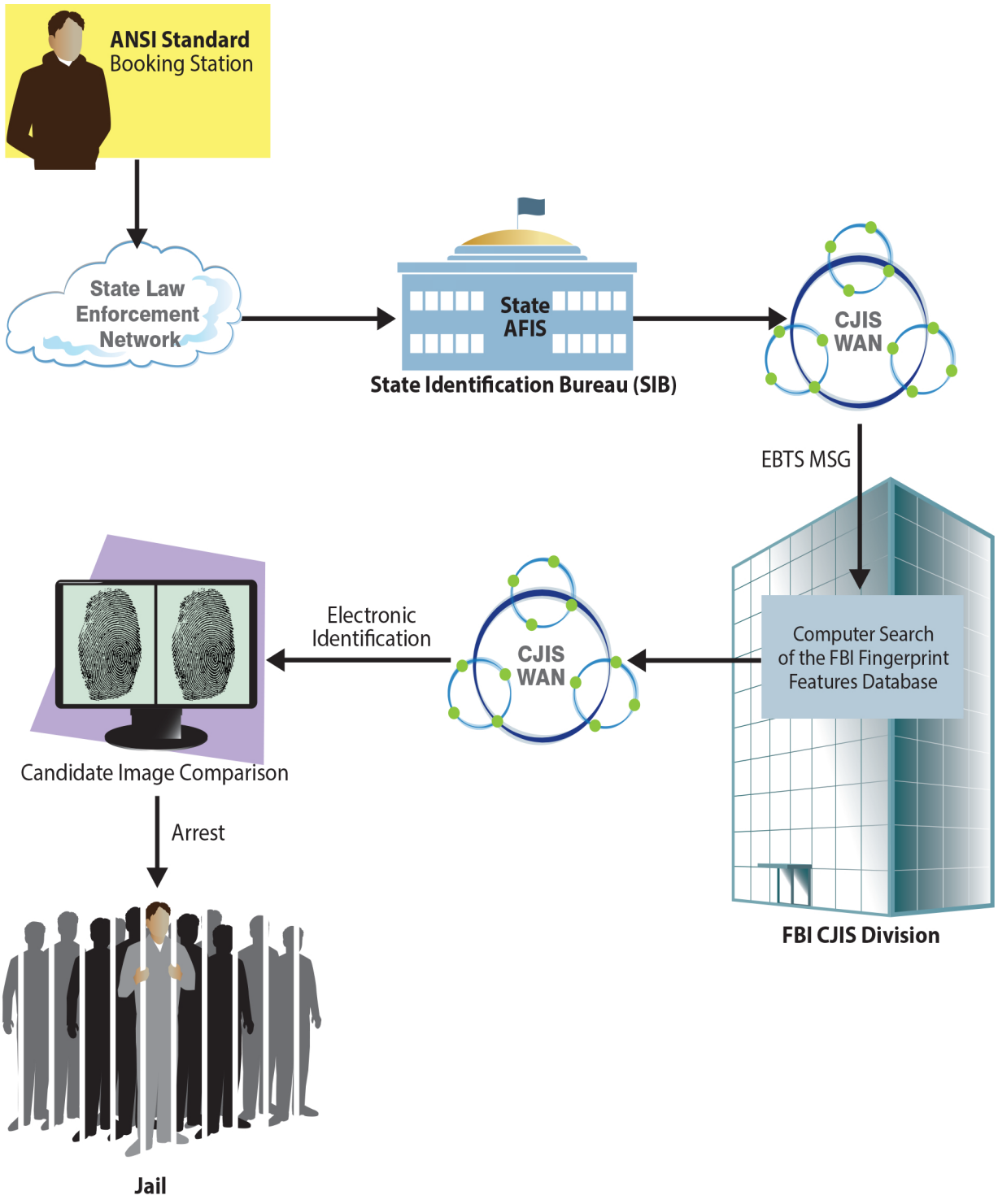

Figure 5 Investigation Fingerprint Submission

The following are the potential responses to tenprint fingerprint submissions:

TOT	TRANSACTION
SRT	Search Results – Tenprint
TRRR	Tenprint Rap Sheet Response
ERRT	Tenprint Transaction Error

Error messages are described in Section 3.7

3.4.1.1 Tenprint Fingerprint Image Search (TPIS)

The Tenprint Fingerprint Image Search (TPIS) contains tenprint fingerprint images along with any descriptors submitted by the submitter. The submitter may designate which repositories to search by including the desired values in the Name of Designated Repository (2.098 NDR) field (e.g., criminal, civil, ULF). The Amputated or Bandaged (2.084 AMP) field is to be included for every amputated or unprintable finger. The fingerprint characteristics will be automatically extracted from the images at the FBI/CJIS with no human intervention. There will be no manual editing of fingerprint characteristics. All 14 fingerprint images for each candidate are returned. The search process of the fingerprint files is conducted and the results transmitted to the originator.

3.4.1.2 Tenprint Rap Sheet Search (TPRS) and Responses (TPRR)

The Tenprint Rap Sheet Search (TPRS) contains tenprint fingerprint images along with any descriptors submitted by the originator. The Amputated or Bandaged (2.084 AMP) field is to be included for every amputated or unprintable finger. The fingerprint characteristics will be automatically extracted from the images at the FBI/CJIS with no human intervention. There will be no manual editing of fingerprint characteristics. The search process of the criminal fingerprint files is conducted and the results transmitted to the originator. The Tenprint Rap Sheet Response (TPRR) consists of identity histories for up to the top twenty candidates. Images are not returned as part of this process.

Note: TPRS is a limited-use TOT that requires coordination with FBI/CJIS prior to use.

The Tenprint Rap Sheet Response (TPRR) will contain a list of candidates and their identity history in the Electronic Rap Sheet (2.075 ERS) field, but no fingerprint images are included.

3.4.1.3 Search Results — Tenprint (SRT)

This transaction is returned by the FBI/CJIS in response to a TPIS request. The Search Results – Tenprint (SRT) response will include a candidate list and the fingerprint images of the highest scoring candidates who potentially match the submitted fingerprints, up to the number specified in the Number of Images Requested (2.2010 NIR) field. Up to 99 candidates may be requested by including the Number of Candidates Returned (2.079 NCR) field in the search request. If NCR is not included in the request, 20 candidates will be returned. If NIR is not specified in the search request, only images from the highest scoring candidate will be returned.

3.4.2 Latent Friction Ridge Investigation Submission

The Latent Friction Ridge (LFR) system provides accurate latent search results through the use of latest generation matching algorithms coupled with an event-based (rather than composite) friction ridge repository. The LFR supports investigative searches of palm and supplemental (joint and tip) prints, in addition to the traditional search of tenprint fingerprint impressions.

An Authorized Contributor may transmit one or more latent print images and/or corresponding features sets, assumed to be from the same subject, to be searched against the NGI friction ridge repositories. This latent print search request will originate from the agency having legal jurisdiction of the case (local, state, federal, or international). To conduct a search with the captured latent prints, the originating agency will electronically transmit either the latent print images within a Latent Friction Ridge Image Search (LFIS); or the latent print features, and preferably the latent print images, within a Latent Friction Ridge Features Search (LFFS) transaction. The latent image in an LFIS/LFFS transaction should be known to be upright (e.g., for Fingerprint tip up ± 15º), with no obscuring background or multiple impressions in the image. For the LFFS that includes a latent image with a Type-9 Record, the Type-9 may optionally provide image orientation information (see 9.020 and 9.301) that deviates from upright.

By default, these images and/or features will not be stored in the Unsolved Latent File (ULF). If the Criminal Master File (CMF) was included in the Name of Designated Repository (2.098 NDR) field, the user may override this behavior by setting the Unsolved Biometric File (2.083 ULF) field to "Y".

All searches must adhere to a hierarchical approach. Submissions by local agencies must be processed by the local AFIS (if available) and electronically transmitted to a state AFIS (if available) before being submitted to the FBI/CJIS. If an identification decision is made at any of the previous levels, the identification response will be transmitted to the originating agency and there will be no further processing of the request at a higher level. All electronic transactions between the FBI/CJIS and the originating agency will be routed via the CJIS WAN or other approved electronic communication medium.

Latent Friction Ridge investigative search TOTs will accept NDR values specified in EBTS, which includes the capability to request a simultaneous search of other external systems, such as Canada's Real-Time ID System or DHS IDENT. The default behavior when the NDR field is not present is to only search the criminal repository. For a given latent investigative search, NGI will not search both known and unknown repositories. If the NDR field contains both repository designations, only the known repository will be searched, and this information will be reported in the Search Results – Latent (SRL) response (see 2.060 MSG field of SRL). Additionally, the user will be able to select in investigative searches whether features and matched minutiae for each candidate print are returned in the SRL.

The extended feature set and matched minutiae will reside in the Extended Feature Set (EFS) section of the Type-9 Record for the candidate(s), as defined in the ANSI/NIST-ITL 1-2011

standard. In order to successfully utilize the new NGI investigative services, changes have been made to the investigative TOTs within EBTS, and will require system programming updates to take advantage of these new capabilities. FBI/CJIS will continue to accept legacy FBI minutiae fields 9.014 – 9.030 to support backwards compatibility.

The biographic and biometric descriptor data contained in the Type-2 Record(s) of the LFFS/LFIS search transaction are used to reduce the search penetration of the desired repositories. If two Type-2 Records are included in the search transaction, the Type-2 with the ULF flag set to "Y" is used for deposit of the latent into the ULF, while the Type-2 with ULF set to "N" sets the search filtering criteria to limit file penetration: if ULF flags in both are "Y", the first Type-2 will be used for searching and the second will be used for the deposit into the ULF. Limiting file penetration by filtering searches based on known information increases search accuracy by reducing the size of the search gallery, therefore reducing the probability that the true match will be replaced in the candidate list by other potential matching impressions. Setting file penetration limits on the latent search also improves search response time. Investigative services users are encouraged to limit searches of the civil and/or criminal file to no more than 50% of the population of the file(s) being searched. NGI supports the biometric filter criteria friction ridge position code and pattern classification, and also supports the biographic filter criteria Date of Birth (only the year of birth is used), Race, Gender, Place of Birth, and Place of Arrest (GEO 2.044). A Latent Penetration Query (LPNQ) may be sent to determine the percentage of repository penetration prior to initiation of a search. The results will be returned in a Latent Penetration Response (LPNR). The response will include the percentage of the repository penetration determined from the submitted parameters in the fields of the Type-2 Record. Detection of errors will cause a Latent Transaction Error (ERRL) response.

The Friction Ridge Generalized Position (2.074 FGP) field may contain one or more of the possible finger or palm positions that may match the latent image. The integer code number corresponding to the known or most probable finger position will be taken from the ANSI/NIST-ITL Standard Finger Position Table or Palm Print Position Table and entered as a one- or two-character ASCII subfield. (See Appendix P for acceptable values.) Additional finger and/or palm positions may be referenced by entering the alternate position codes as subfields separated by the {RS} separator character. The code "0" for "Unknown Finger" shall be used to reference every finger position. The code "20" for "Unknown Palm" shall be used to reference every listed palm print position. The Type-2 Print Position Description (2.2030 PPD) field is used when FGP is set to "19", in order to filter which part(s) of a supplemental print(s) should be searched. The code "18" for "Unknown Friction Ridge" shall be used to reference every listed friction ridge position and will be used as the default when FGP is omitted or blank.

NGI will continue to support the multi-finger latent fingerprint search request, where finger positions 1 through 10 are supported. Multiple fingerprint images may be searched if the submitter believes the images are from a single subject, and a unique finger position is provided for each image. Only this set of fingerprint positions will be searched.

When submitting a single latent image, the submitter may use the Pattern Level Classification (2.034 PAT) and FGP fields as follows to indicate that the position is unknown while allowing

speculation on the finger position: (1) set the Finger Number subfield of FGP to "0" to indicate the finger position is unknown while supplying the Pattern Classification Code as usual, (2) submit one or more instances of the FGP field containing the finger position guesses or (3) set the FGP field of the Type-7/13 record, to "0." If many finger guesses for a single finger search are provided, the PAT field should be entered only for the first finger guess and will be automatically duplicated by FBI/CJIS for all other finger guesses.

The following list of TOTs is applicable to latent friction ridge searches transmitted to the FBI/CJIS:

TOT	TRANSACTION
LFIS	Latent Friction Ridge Image Search
LFFS	Latent Friction Ridge Features Search
LPNQ	Latent Penetration Query

The following are the potential responses to latent friction ridge transactions:

TOT	RESPONSE TRANSACTION
SRL	Search Results – Latent
LPNR	Latent Penetration Query Response
ERRL	Latent Transaction Error

Error messages are described in Section 3.7

Figure 6 provides a high level view of the Latent Friction Ridge Investigative service workflow, to include the notification service and data management service transactions explained in the Notification Service and Data Management Service sections.

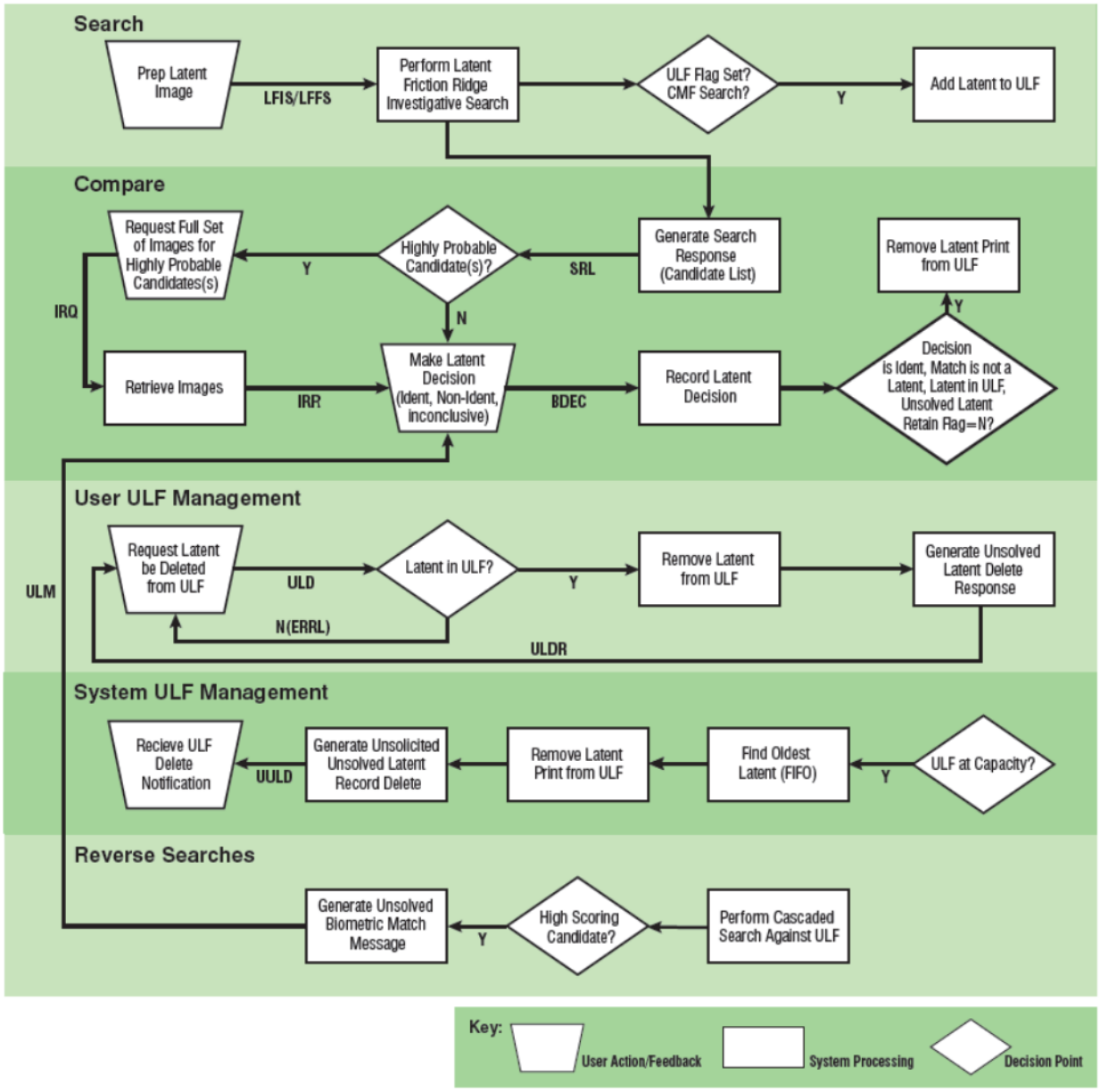

Figure 6 Latent Friction Ridge Investigation Workflow

The following paragraphs describe in detail the TOTs associated with the Latent Friction Ridge Investigative Service.

3.4.2.1 Latent Friction Ridge Image Search (LFIS)

In the Latent Friction Ridge Image Search (LFIS) transaction, the latent friction ridge images are transmitted with search criteria by the originator. The friction ridge features will be automatically extracted from the images with no human intervention: there will be no manual editing of friction ridge characteristics by FBI Latent Examiners. FBI/CJIS will conduct a search of the designated repository or repositories and will transmit the results back to the originator. In the event that

images are of insufficient quality for the LFR system to be able to extract features and perform a search, FBI/CJIS will respond with a Latent Transaction Error message.

3.4.2.2 Latent Friction Ridge Features Search (LFFS)

In the Latent Friction Ridge Features Search (LFFS) transaction, the latent friction ridge features are extracted by the originator and transmitted with the search criteria. Inclusion of the latent search image is highly recommended to increase search accuracy. FBI/CJIS will conduct a search of the designated repository or repositories and will transmit the results back to the originator. The friction ridge features referred to here are the Extended Feature Set (EFS) friction ridge features as defined in Appendix J: the originating agency must have the capability to extract and encode friction ridge features compliant with the EFS to use this TOT.

3.4.2.3 Search Results - Latent (SRL)

The response to a Latent Friction Ridge Investigation Submission is the Search Results – Latent (SRL) response, which includes up to three ranked Candidate Investigative Lists (2.2033 CNL) - one for each friction ridge type (fingerprints, lower palm, upper palm) searched - and the friction ridge images of the highest scoring candidates who potentially match the submitted latent prints, up to the number specified in the Number of Images Requested (2.2010 NIR) field. Up to 99 candidates may be requested by including the Number of Candidates Returned (2.079 NCR) field in the search request. If NCR is not included in the request, then the top 20 candidates will be included in each ranked candidate list. If NIR is not specified in the search request the top 20 matching images will be returned per ranked candidate list. The NCR and NIR field values in the SRL may be smaller than their values in the LFIS/LFFS request (i.e., their values are not simply echoed from the search request). In addition, if the search included an indication that the latent image should be stored in the Unsolved Latent File, the SRL will return the FBI Number/UCN (2.014 FBI) of the stored unsolved latent image.

If the latent search included more than one latent print (a multi-finger latent search), a merged candidate list will be returned for each friction ridge type searched.

If requested in the originating search request, features and matched minutiae for each candidate print image are returned in the SRL response. The features and matched minutiae will reside in the EFS section of the Type-9 Record(s). When features are requested, the SRL will contain biometric data for both probe and candidates. The Information Designation Character (2.2033J IDC) values for the candidate list images/features will be recorded in the CNL, while the IDC for the probe features will not. The probe features will always precede the candidate image and features in the transaction, therefore, when NIR is 20 there will be 21 Type-9 Records; the first one will present the matched minutiae of the searched image and the remaining Records will be those of the candidates returned. For multi-finger latent searches, there will be Type-9s for each probe image, distinguished by finger position. There can be up to 10 Type-9s for the probe, followed by the candidate Type-9s.

For latent records from the ULF, the latent record's Subject Identifier (2.2033A SI) will be returned. If the Image Type (2.2033D IMT) information item indicates a latent image, then the UCN information item of the CNL field is a latent UCN for that candidate.

If there are matches from multiple events for a given Subject Identifier (2.2033A SI) in the candidate list, the Biometric Set Identifier (2.2033C BSI) for each of these events will be listed in the CNL. This additional information is to enable retrieval of additional candidate biometric images via the Biometric Image/Feature Retrieval Request (IRQ). For each subject, only the highest-scoring image for a given finger, palm region, or supplemental region is returned within the SRL; for the additional events, no images/features are returned within the SRL.

The Name of Designated Repository (2.2033I NDR) will be populated with the NDR value(s) the candidate resides in, limited to those NDR values actually searched. The order of precedence for searching based on requested NDR is as follows:

1. Criminal and/or Civil is present then search known records
2. Criminal and/or Civil is not present and ULF is present then search unsolved records
3. Criminal and/or Civil and ULF are not present and at least one SPC contains known, then search known records

The Status/Error Message (2.060 MSG) field reports when the latent search request specified repositories that contained both known and unsolved records. The first occurrence of the MSG field states which records (known or unsolved) and repositories were not searched. When images, candidate features and matched minutiae are being returned, the MSG field will also contain the text: "This match was made using information beyond feature data," to alert users that the NGI matcher improves accuracy by use of additional imagery data.

3.4.2.4 Latent Penetration Query (LPNQ)

The Latent Penetration Query (LPNQ) allows the user to check search parameters to ensure that a Latent Friction Ridge Investigation search does not exceed the maximum penetration recommended by FBI/CJIS of 50 percent. Penetration tables developed by the NGI LFR system may be used as an aid to help the user determine expected penetration. This transaction applies only to a single finger, even if the original transaction included multiple fingers.

The LPNQ contains the search parameters in a Type-2 Record. The search parameters can contain NDRs, biographic descriptors (DOB, RAC, SEX, GEO and POB), fingerprint classification, and fingerprint/palm print position code data. If values are other than Criminal or Civil are provided for NDR, then a penetration value for the Criminal repository is returned based on the rest of the search criteria.

3.4.2.5 Latent Penetration Query Response (LPNR)

The response to a penetration query will contain the estimated size for the repository search based on the transaction-defined characteristics. The response will indicate the ratio of penetration to

allow further refinement of the search criteria. The Penetration Query Response (2.078 PEN) field contains a penetration ratio as determined by the search criteria in the LPNQ request. The penetration value returned in the PEN field will be a combined ratio of the repositories specified in the LPNQ request. SPC(s) and ULF are not considered (see LPNQ above).

3.4.3 Latent Administrative Queries, Requests, and Responses

Administrative requests can be solicited by the users to improve the accuracy and efficiency of their latent operations by gaining insight into the composition of the FBI/CJIS search repositories for use in search filtering. The Latent Repository Statistics Query (LRSQ) provides the users with the statistical representation of the FBI/CJIS Criminal and/or Civil Master File used to estimate search penetration.

The following Types of Transactions (TOTs) are included in the Latent Administrative Queries:

TOT	TRANSACTION
LRSQ	Latent Repository Statistics Query

The following are the responses to the above transactions:

TOT	RESPONSE TRANSACTION
LRSR	Latent Repository Statistics Response
ERRA	Administrative Transaction Error Response

Error messages are described in Section 3.7

3.4.3.1 Latent Repository Statistics Query (LRSQ)

The Latent Repository Statistics Query (LRSQ) requests the current statistics used to estimate the penetration of the Criminal and/or Civil Repository by a latent search based on the various input characteristics. This query will provide the users the data used to estimate the repository penetration of a latent search without having to use the Latent Penetration Query.

3.4.3.2 Latent Repository Statistics Response (LRSR)

The Latent Repository Statistics Response (LRSR) to the LRSQ will provide the users the data required to estimate the repository penetration of a particular latent search. The ASCII file contained in the Repository Statistics Response (2.065 RSR) field will contain the parameters used to filter searches of the NGI (civil and criminal) repositories. Data will be returned for the civil and criminal files individually, as well as for the civil and criminal files in total. Statistics will not be generated for the ULF or SPC(s).

3.4.4 Biometric Investigation Submission

In addition to the FBI/CJIS accepting other biometrics in conjunction with Tenprint Fingerprint Identification Submissions and enrollment of other biometrics, NGI also accepts additional biometric modality investigation searches.

3.4.4.1 Photo Investigation Submission

Conducting investigative photo searches against the NGI database may be accomplished using one of three methods. The Text-Based Photo Search will employ demographic data as the search criteria to retrieve an unranked list of possible candidates and their most recently taken frontal face photo. The Text-Based SMT Search will consist of using demographic data and SMT descriptors (e.g., 2.026 SMT, 2.2058 SMD) to find an unranked list of possible candidates and their SMT photos. The Facial Recognition Search will consist of comparing features from a probe photo against the gallery of photos and corresponding face features in the NGI database.

The following Types of Transactions (TOTs) are included in the Photo Investigation Submissions:

TOT	TRANSACTION
TXTSRCH	Text-Based Photo/SMT Search Request
FRS	Facial Recognition Search Request

The following are the responses to the above transactions:

TOT	RESPONSE TRANSACTION
SRB	Search Results – Biometric
ERRB	Biometric Search Error Response

Error messages are described in Section 3.7

3.4.4.2 Text-Based Photo/SMT Search Request (TXTSRCH)

This transaction will allow the user to specify demographic data along with Scar, Mark, and Tattoo (SMT) descriptive data to be used in a search for investigative leads and return facial or SMT photos, based on the Image Type (2.062 IMT) and descriptive parameters specified in the request. The TXTSRCH transaction is typically used to generate photo lineups of criminal subjects that have physical characteristics (e.g., hair color, eye color, sex, SMT specific characteristics, etc.) similar to a criminal suspect. To search for facial images, the IMT (2.062) field must be set to '9' and the sought for image should be described using one or more of the biographic descriptive fields. Each descriptor will be added to the required match parameters, therefore adding multiple descriptors may return few or no candidates.

In order to search for an SMT image, the IMT (2.062) field must be set to '10' and the SMT should be described using the 2.026 SMT, 2.2058 SMD, 2.2059 TCL and 2.2055 SMS fields as applicable.

Up to three possible SMT locations may be specified for the search. Occurrences of SMD and TCL correspond to one another (i.e., the first occurrence of TCL describes the colors of the first occurrence of SMD). All specified values of SMD and TCL will be applied to each of the SMT locations.

Up to 99 candidates may be requested by including the Number of Candidates Returned (2.079 NCR) field in the search request. If NCR is not included in the request, 20 candidates will be returned. If NIR is not specified in the search request, one image per candidate will be returned, up to a maximum of 50. The returned Candidate Investigative List (2.2033 CNL) will contain an unranked list of possible candidates.

3.4.4.3 Facial Recognition Search Request (FRS)

The Facial Recognition Search (FRS) transaction allows the user to submit an investigative search of a frontal (both eyes visible) facial photo. The face image and optional demographic filtering information is searched against photos in the NGI repositories for possible candidates. It is important to note that if demographic fields are provided, then the search results will only contain candidates that match the entire set of demographics provided. Although Name of Designated Repository (2.098 NDR) is included as an optional field in FRS, requests to search face photos from the civil repository will be ignored, and a corresponding permission error will be included in the response. The returned Candidate Investigative List (2.2033 CNL) will contain a ranked list of possible candidates. The user may add the probe photo to the Unsolved Photo File (UPF) by setting the Unsolved Biometric File (2.083 ULF) field to "Y". FRS transactions are limited to Law Enforcement Agencies. To ensure that only the approved agencies are using the facial recognition search capabilities, the first occurrence of the Contributing Agency Identifier (CRI) 2.073 field of an FRS transaction will be a required field and validated. If the CRI fails to pass the validation, the transaction will be rejected with a Biometric Search Error Response (ERRB) value of "A0004 – Requester is not authorized for transaction type FRS".

Information derived from Facial Recognition Search Requests and resulting responses are to be used only as investigative leads. Though there are expected to be similarities between submitted images and candidate lists, results shall not be considered to be positive identifications nor considered to have active warrants. Although the emerging technology of facial recognition has made great strides over the years, facial recognition initiatives are not deemed to provide positive identifications and the Parties are prohibited from relying solely on SRB search responses as the sole impetus for law enforcement action: other indicators and factors must be considered by the submitting agency prior to making identification.

3.4.4.4 Search Results - Biometric (SRB)

This transaction is returned by FBI/CJIS in response to investigative searches that are not friction ridge based, such as FRS or TXTSRCH. The Search Results – Biometric (SRB) response includes a Candidate Investigative List (2.2033 CNL) of Subject Identifiers (2.2033A SI) up to the number specified in the Number of Candidates Returned (2.079 NCR) field of the search message. The SRB also includes corresponding number of biometric images, up to the value of the Number of

Images Requested (2.2010 NIR) field presented in the request, or 20 images if NIR is omitted. If there are hits from multiple BSIs for a given SI only the top scoring BSI for a UCN is listed in the CNL and placed in score order. Therefore a UCN will only be represented once in CNL for FRS and TXTSRCH.

If NCR was omitted in the search, the default behavior is to return up to 20 ranked (FRS) or unranked (TXTSRCH) candidates, depending on the search type. Up to 99 candidates may be requested by including the Number of Candidates Returned (2.079 NCR) field in the search request, but the number of candidates returned may be less than the specified NCR as a result of thresholds determined by trade study tests and the algorithm used to determine potential matches. A maximum of 50 images may be requested, however, the number returned will not exceed the number of candidates returned. Additional biometric images on file for each candidate may be retrieved through separate Biometric Image/Feature Retrieval Requests (IRQs).

If there are no candidates available, an SRB will be returned with NCR set to "0".

3.4.5 Iris Image Investigation Search Submission (Future Capability)

Iris Image Investigation Search Submissions allow the user to submit a one-to-many investigation search against the FBI/CJIS Iris Identification File (IIF) using an Iris image as the search probe. As opposed to an identification search, the iris investigation search results consist of a list of candidates that must be adjudicated by the user.

The following TOT will be accepted by the FBI/CJIS for Iris Image Investigation Search Submissions:

TOT	TRANSACTION
IIIS	Iris Image Investigation Search

The FBI/CJIS response to electronic submissions will provide search results or indicate an error via the following TOTs:

TOT	RESPONSE TRANSACTION
SRB	Search Results – Biometric
ERRB	Biometric Search Error Response

Error messages are described in Section 3.7

3.4.5.1 Iris Image Investigation Search (IIIS) (Future Capability)

The Iris Image Investigation Search (IIIS) transaction allows the user to submit the right or left iris image for a given individual to be used for searching against the IIF for possible investigative leads. Such iris images may be extracted from a visible light facial photo obtained under less than ideal conditions, such as iris images from photos extracted from video surveillance footage.

Subsequently, images submitted with an IIIS transaction are likely to be of relatively poor quality. All IIIS searches of the IIF will be one-to-many investigative type searches. An IIIS transaction will result in up to the 50 best scoring candidates returned in an SRB transaction. The enrolled iris image associated with each matched candidate will be returned. If the IIIS contains any errors, an ERRB will be returned.

Iris image search functionality is currently in the pilot phase. Therefore, the IIIS is a limited use TOT that requires coordination with FBI/CJIS prior to use.

3.4.6 Biographic Investigation Submission

The Biographic Investigation Submissions are used to perform investigative searches using the subject's biographic data instead of biometric data. The changing political and social climate necessitates the development of a process to ensure that people attending large public functions, such as the G8 Summit or a political convention, are not associated with terrorist or criminal organizations. The development of the retrieval of a subject's history via a biographic search provides a means to efficiently screen large numbers of people. This function is available on a limited basis to federal agencies with prior written authorization from the FBI.

See Appendix B for details of the Type-1 Record, Appendix C for details of the Type-2 Record, and Table E-1 for a complete list of all mandatory and optional data for Biographic Investigation Submissions.

The following TOT is applicable to these biographic search submissions to the FBI/CJIS:

TOT	TRANSACTION
EQHR	External Query History Request

The following are the responses to the above transaction:

TOT	RESPONSE TRANSACTION
EHRR	External History Request Response
EQER	External Query History Error Response
EQRR	External Query History Request Response - Summary
ERRR	Transaction Error (Electronic Response)

Error messages are described in Section 3.7

3.4.6.1 External Query History Request (EQHR)

The External Query History Request (EQHR) submission requires that the subject's name, place of birth, and date of birth be submitted. A more accurate candidate list is compiled if the biographic search is performed with more criteria. Therefore, optional data, such as hair color, eye color, height, or weight may be submitted. External History Queries will have a transaction priority level of 6, which is considered "secondary".

3.4.6.2 External History Request Response (EHRR)

For each candidate returned in the EQRR, a separate External History Request Response (EHRR) is returned, if requested. If no candidates are returned in the EQRR, no EHRR messages will be returned to the contributor. Each EHRR message will contain an Identity History Summary for a candidate returned in the summary report.

3.4.6.3 External Query History Error Response (EQER)

When the External Query History Request contains errors, such as missing mandatory information or invalid contents, the External Query Error Response (EQER) will be returned to the contributor. The response will include the Status/Error Message (2.060 MSG) field indicating the type(s) of error(s) encountered. See the Error Message Format Section for more detail on how this response is formatted (Appendix M).

3.4.6.4 External Query History Request Response - Summary (EQRR)

An External Query History Request Response – Summary (EQRR) will be returned as a summary report of the number of candidates returned from the search and the UCN of each candidate. The number of EHRR and ERRR messages returned for the search, up to 20, will be equal to the number of candidates stated in the EQRR message.

3.4.6.5 Transaction Error (Electronic Response) (ERRR)

When the result of the External Query History Request contains candidate(s) where the Identity History Summary is not available, the Transaction Error (Electronic Response) (ERRR) will be returned to the contributor. The ERRR will include a Status/Error Message (2.060 MSG) field indicating the status of the record. If the DOB in the EQHR is omitted or invalid, an ERRR indicating the error will be the only response. (See Section 3.7)

3.5 Notification Service

NGI's Notification Service provides agencies with unsolicited notifications based on triggering event criteria. An unsolicited notification may be triggered by functions initiated by the system, Authorized FBI Service Providers, or Authorized Contributors. One of the functions that may trigger these notifications is the cascaded searches from identification and investigative searches. The update of an Identity History record may also be a triggering event; since these events are not submissions, the Transaction Control Reference (1.010 TCR) field will not be populated in these cases.

Unsolved Latent Match (ULM) and Unsolicited Unsolved Latent Delete (UULD) are used for friction ridge notifications. Unsolved Biometric Match (UBM) and Unsolicited Unsolved Biometric Delete (UUBD) are used for non-friction ridge notifications.

Appendix E provides a summary of the Notification Service transactions with the Type-2 fields that are optional and mandatory. Appendix C contains the detailed information for each of the Type-2 fields.

NGI unsolicited notifications are as follows:

TOT	NOTIFICTIONS
SPN	Special Population Cognizant Notification
RBN	Rap Back Activity Notification
RBRN	Rap Back Renewal Notification
UHN	Unsolicited Hit Notification
UBM	Unsolved Biometric Match
ULM	Unsolved Latent Match
UUBD	Unsolicited Unsolved Biometric Delete
UULD	Unsolicited Unsolved Latent Delete

3.5.1 Special Population Cognizant Notification (SPN)

A Special Population Cognizant Notification (SPN) notifies the owner of a Special Population Cognizant (SPC) File identity that a biometric image from the identity has been potentially or positively matched with a biometric image from an identification or investigative search transaction. ATN, SCNA, and CRI are associated with the SPC record, while the biographic information fields (FBI, NAM, AKA, POB, CTZ, DOB, SEX, RAC, SMT, HGT, WGT, EYE, HAI, DPR, MSG, IMT, FGP, BSI, PPD, BIA, and POS) are associated with the search transaction identity that hit against the SPC record. The FBI Number/UCN (2.014 FBI) field may contain "BDEC" when the SPN is generated from an investigative search result. Only the imagery from the incoming identification or investigative transaction that is a potential match will be returned in the SPN. The SPC identity imagery will not be returned.

3.5.2 Rap Back Activity Notification (RBN)

When a Triggering Event occurs, a Rap Back Activity Notification will be sent to the Rap Back Subscription Owner. Agencies may opt out of receiving in-state notifications from the NGI's Rap-Back Service; the default behavior is to send all events based on the selected triggers regardless of the source of the event. The information provided in the Rap Back Subscription will determine the Triggering Events and the format of notification agencies receive. However, NGI will provide a Rap Back Activity Notification for all Subscriptions for the following conditions:

- Consolidation may trigger a Rap Back Activity Notification for any of the Identities involved in the consolidation. The triggering event information will include a list of the FBI Number/UCNs for the consolidated Identities
- Identity Deletion
- Identity Restoration

The Rap Back Activity Notification Format is indicated within the transaction that establishes the Rap Back Subscription. A Rap Back Activity Notification may be one of three formats: Pre-Notification, Triggering Event, or Identity History Summary with Triggering Event. See Appendix C, Rap Back Notification Format (2.2062 RBNF), for more information regarding format parameters.

3.5.3 Rap Back Renewal Notification (RBRN)

The FBI/CJIS will send a Rap Back Renewal Notification to the Rap Back Subscription Owner 10 days prior to the designated expiration date for each Rap Back Subscription, advising of the upcoming expiration of their Rap Back Subscription. The Rap Back Subscription Owner has the ability to extend the expiration date to a new date. The Rap Back Renewal Notification will include key Rap Back Subscription data in addition to the expiration date.

3.5.4 Unsolicited Hit Notification (UHN)

For records in the RISC, an Unsolicited Hit Notification (UHN) will be provided to the owner of the RISC record when there is a hit (red RPIS response) against a highly probable candidate. For records outside of RISC, such as Supervised Release records, the UHN will be provided when an identification is made against the contributor's biometric record on file. Only agencies that have requested this notification will receive this message type.

3.5.5 Unsolved Biometric Match (UBM)

These notifications are sent to the owner of an unsolved biometric image when a newly submitted biometric is a potential match to their record. An Unsolved Biometric Match (UBM) will also occur after a positive Biometric Decision submission from a directed search of an unsolved file, when the submitter does not own the unsolved candidate record. The UBM will include the FBI Number/UCN (2.014 FBI) and the biographic identifiers associated with the subject that matched the unsolved image. Within the UBM transaction, the Biometric Image Available (2.2031 BIA) field reflects the available biometric image types for the candidate identity, the Biometric Set Identifier (2.2029 BSI) field uniquely identifies the matching biometric, and the Image Type (2.062 IMT) field indicates what type of biometric set matched the unsolved record.

3.5.6 Unsolved Latent Match (ULM)

An Unsolved Latent Match Notification (ULM) is sent to the owner of an unsolved latent record when newly submitted criminal, civil, or latent friction ridge searches match the unsolved latent case image. A ULM will occur after a Biometric Decision submission of an identification decision from a search of the ULF. The contributor should use the Subject Control Number (2.086 SCNA), Contributor Case Identification Numbers (2.010 CIN/2.011 CIX), and Attention Indicator (2.006 ATN) fields to aid in the association of their original submission with this notification.

Table 4 Unsolved Record Submission Matches

Unsolved Record Information	Matched Submission Information		
CIN	FBI Number/UCN	RAC	PHT
CIX	NAM	SMT	DPR
ATN	AKA	HGT	MSG
SCNA	POB	WGT	FGP
CRI	CTZ	EYE	BSI
	DOB	HAI	PPD
	SEX	PPA	BIA

The Biometric Image Available (2.2031 BIA) field is included to reflect the available biometric image types available for the enrolled identity that matched the latent. Depending on availability, the existing Subject Control Number (2.086 SCNA) field is populated with the legacy SCNA or with the FBI Number/UCN value for the ULF latent that matched. The FBI Number/UCN (2.014 FBI) field may contain "BDEC" when the ULM is generated from an investigative search result.

The ULM will return the complete image set that was matched against the Unsolved Latent File, whether retained by NGI or not. ULMs for non-retain submissions will include the slap fingerprint images (up to 14 total). In addition, the ULF image, if available, will be returned as the last image returned in the file.

The owner of the unsolved latent case is responsible for conducting the comparison.

3.5.7 Unsolicited Unsolved Biometric Delete (UUBD)

This transaction is used to indicate that a record has been deleted from one of the FBI/CJIS's unsolved biometric files. An automated delete occurs when an attempt is made to add a record to an unsolved biometric file that contains the maximum number of allowable records; the oldest record in the file will be deleted. The FBI Number/UCN (2.014 FBI) field is populated with the value for the deleted unsolved identity. The contributor should use the UCN, Contributor Case Identification Numbers (2.010 CIN/2.011 CIX), and Attention Indicator (2.006 ATN) fields to aid in the association of their original submission with this notification.

3.5.8 Unsolicited Unsolved Latent Delete (UULD)

This transaction is used to indicate that a record has been deleted from the FBI/CJIS's ULF by the LFR system. An automated delete occurs when an attempt is made to add a record to the ULF file or sub-file which contains the maximum number of allowable records; the oldest record in the file or subfile will be deleted. If a set of unsolved latent images were added from a multi-finger latent search, the UULD applies to the entire set of images added. Depending on availability, the existing Subject Control Number (2.086 SCNA) field is populated with the legacy SCNA or with the FBI Number/UCN value for the ULF latent. The contributor should use the SCNA, Contributor Case Identification Numbers (2.010 CIN/2.011 CIX), and Attention Indicator (2.006 ATN) fields to aid in the association of this notification with their original submission.

3.6 Data Management Service

The Data Management Service provides users with the ability to manage data within the NGI System. Users can add, delete, and modify data contained in the NGI System that is under their control. Appendix I provides a summary of the Data Management Service transactions, listing the Type-2 fields that are optional and mandatory. Appendix C contains the detailed information for each of the Type-2 fields.

The following TOTs are file maintenance transactions transmitted to the FBI/CJIS:

TOT	TRANSACTION
ULD	Unsolved Latent Record Delete Request
BDEC	Biometric Decision Submission
BDEL	Biometric Delete Request
CDEL	Civil Event Deletion Request
CPD	Subject Photo Delete Request
DSPE	Disposition File Maintenance Submission
FIS	Biometric Image Submission Request
SPMNT	Special Repository Maintenance Request
SRNR	Supervised Release Notification Request
RBSCRM	Rap Back Subsequent Subscription - Criminal
RBSCVL	Rap Back Subsequent Subscription - Civil
RBMNT	Rap Back Maintenance Request
XACT	External System Link Activity Request
XMNT	External System Link Maintenance Request

The FBI/CJIS response to file maintenance transactions are as follows:

TOT	RESPONSE TRANSACTION
ULDR	Unsolved Latent Delete Response
BDECR	Biometric Decision Response
BDELR	Biometric Delete Response
CDELR	Civil Event Deletion Response
PDR	Subject Photo Delete Response
DSPR	Disposition File Maintenance Response
FISR	Biometric Image Submission Response
SPMNTR	Special Repository Maintenance Response
SRNRR	Supervised Release Notification Response
RBSR	Rap Back Subscription Response
RBMNTR	Rap Back Maintenance Response
XACTR	External System Link Activity Response

TOT	RESPONSE TRANSACTION
XMNTR	External System Link Maintenance Response
ERRA	Administrative Transaction Error
ERRI	Information Transaction Error
ERRL	Latent Transaction Error

Error messages are described in Section 3.7

3.6.1 Unsolved Latent Record Delete Request (ULD)

The Unsolved Latent Record Delete Request (ULD) transaction is used to request that unsolved latent file records be removed from the FBI/CJIS ULF. The identification numbers used to designate the latent record to be deleted are the Contributor Case Identification Numbers (2.010 CIN/2.011 CIX) and the Subject Control Number (2.086 SCNA) field. If a set of unsolved latent images were added from a multi-finger latent search, the ULD applies to the entire set. The existing SCNA field is populated with either the legacy SCNA value or the FBI Number/UCN of the latent record to be deleted. The processing flow for electronic requests to delete Unsolved Latent Friction Ridge records is illustrated in Figure 7.

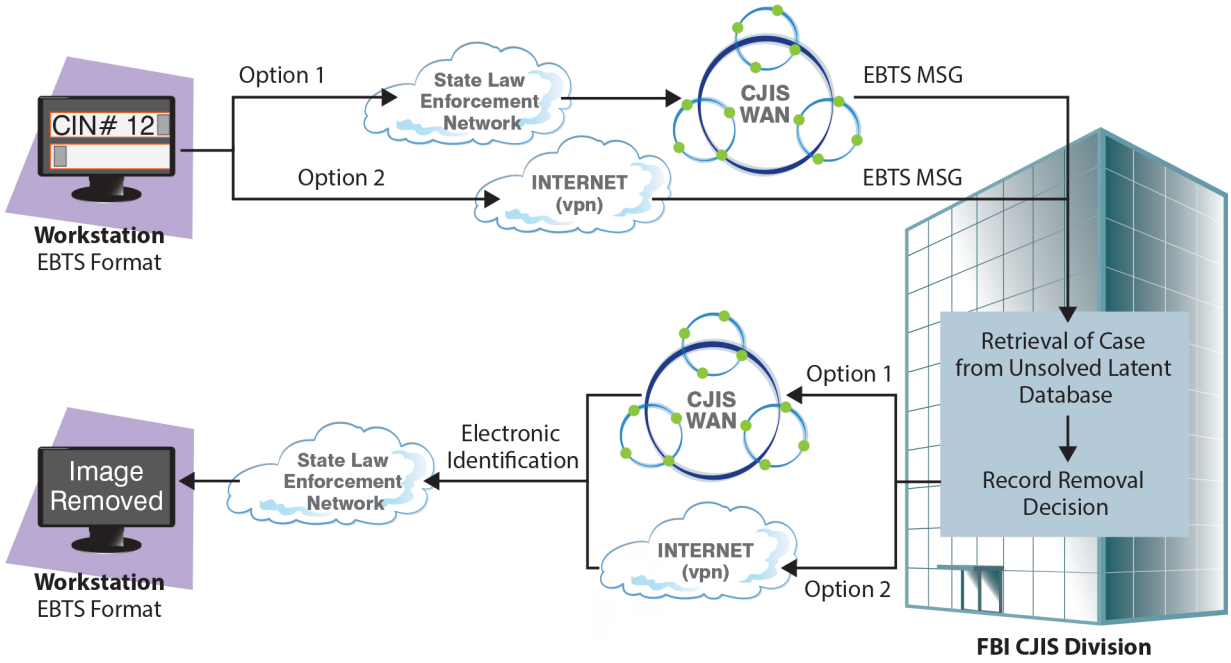

Figure 7 Electronic Requests to Delete Unsolved Latent Friction Ridge Records

3.6.2 Unsolved Latent Delete Response (ULDR)

This transaction is used to indicate that a record has been deleted from the NGI ULF in response to a ULD message. The Type-2 Record contents of the ULDR transaction are listed in Table I-1. If any errors are encountered, an ERRL is returned.

3.6.3 Biometric Decision Submission (BDEC)

This transaction allows the user to notify the FBI/CJIS of a decision for a potential match resulting from an unsolved or investigative search. The Biometric Decision Submission (BDEC) will be used to generate statistics in order to track and analyze FBI/CJIS investigative service performance and identify possible improvements. This message requires identifiers about the matched candidate, the searching record (or probe), and the biometric decision.

The candidate record is identified through the FBI Number/UCN (2.014 FBI) field. For latent and tenprint investigative search decisions, the Biometric Set Identifier (2.2029 BSI) can optionally be provided to explicitly designate the image set used for the decision. The FGP (2.074) field also may optionally be used to specify the position code of the friction ridge record that resulted in the decision. For facial photo decisions, the BSI is required.

For latent, tenprint, and facial investigative searches, the probe is identified by the TCR (1.010) field in the Type-1 record of the BDEC; it will contain the Transaction Control Number value from the TCN (1.009) field of the ULM, UBM, SPN, SRL, SRB, or SRT.

When BDEC is applicable to friction ridge the appropriate SRF values are Identification (I), Non-Identification (N), Pending Verification of Identification (P), and Inconclusive (C). When BDEC is applicable to facial photo the appropriate SRF values are Identification (I), Probable (Y), Inconclusive (C), and Non-Identification (N).

Unless the Unsolved Latent Retained (2.2034 ULR) field is set to “Y”, an IDENT decision on an unsolved record from a known probe will result in the record being deleted if the requestor owns the unsolved record. A ULR value of “Y” indicates that the unsolved record should be retained (i.e., in the ULF or UPF). If the requestor does not own the unsolved record or the probe is also an unknown record then the unsolved record in the ULF or UPF is not deleted, and a ULM, UBM, or SPN notification is triggered to the owner of the unsolved record. A notification (ULM or UBM) will not be generated if the BDEC reflects a negative decision.

3.6.4 Biometric Decision Response (BDECR)

This transaction is returned after a successful Biometric Decision Submission is completed. If any permission or processing errors are encountered, an ERRA transaction is returned. If the decision is a positive identification and the matched candidate is a latent, the Status/Error Message (2.060 MSG) field will indicate if the latent was deleted.

3.6.5 Biometric Delete Request (BDEL)

This transaction allows the user to request deletion of a specific biometric set which they own. The owner is defined as the CRI who enrolled the biometric. The requestor must specify the appropriate identifiers of the images to be removed. The FBI Number/UCN (2.014 FBI) and Biometric Set Identifier (2.2029 BSI) are used to specify the image set or photo being deleted.

The BDEL can be used to remove biometrics from the ULF and the UPF, where three combinations of identifying information are supported: FBI Number/UCN and BSI; CIN; or CIN and CIX. The legacy ULD TOT continues to be supported to allow deletion of ULF entries using the Subject Control Number (2.086 SCNA) field.

The BDEL can also be used to remove biometric images from a special identity by including the FBI Number/UCN (2.014 FBI) and Biometric Set Identifier (2.2029 BSI) values.

3.6.6 Biometric Delete Response (BDELR)

The Biometric Delete Response (BDELR) is returned when a successful Biometric Delete Request is completed. If any permission or processing errors are encountered, an error transaction (ERRA) is returned. Since it is possible for more than one FBI Number/UCN to be deleted in a single BDEL transaction using the Case Identifiers (2.010 CIN/2.011 CIX), the FBI Number/UCN (2.014 FBI) field will support up to 25 values. If more than 25 UCNs are deleted, it will be reported to the contributor in the Status/Error Message (2.060 MSG) field.

3.6.7 Civil Event Deletion Request (CDEL)

The Civil Event Deletion Request (CDEL) updates the Identity History record by removing the requested civil event from the specified Identity. This transaction requires a valid FBI Number/UCN (2.014 FBI) and a valid Event Identifier (2.2035 EVI). Additionally, the originator of the request must be the owner of this civil event. If the CDEL request removes the last event for a civil-only identity, then the identity is removed from FBI/CJIS systems.

3.6.8 Civil Event Deletion Response (CDELR)

The Civil Event Deletion Response (CDELR) is returned when a successful Civil Event Deletion Request was completed. If any permission or processing errors are encountered, an error transaction (ERRA) is returned. If a Rap Back Subscription is associated with the deleted event, it is deleted as well, and this information is reported in the Status/Error Message (2.060 MSG) field of CDELR.

3.6.9 Subject Photo Delete Request (CPD)

This legacy transaction enables users to delete a specific photo set associated with a Date of Arrest (2.045 DOA). Only the owner of a photo set may delete it. The requester specifies the FBI Number/UCN (2.014 FBI) of the subject and the DOA.

3.6.10 Subject Photo Delete Response (PDR)

This legacy transaction is the response to a Subject Photo Delete Request (CPD). If the request contains any errors, the Response Code (2.082 REC) field will be set to “N”. The Subject Photo Delete Response (PDR) will be returned including the reason for the rejection in the Response Explanation (2.080 EXP) field.

3.6.11 Disposition File Maintenance Submission (DSPE)

The Disposition File Maintenance Submission (DSPE) allows an authorized contributor to add, to replace, append, or delete disposition data on an existing arrest event. The Event Identifier (2.2035 EVI) or Date of Arrest (2.045 DOA) field is used to associate the disposition information with an existing arrest event. Either EVI or DOA must be populated. EVI is preferred, as DOA may not be unique for a subject arrested multiple times in a single day.

3.6.12 Disposition File Maintenance Response (DSPR)

The Disposition File Maintenance Response (DSPR) will be sent back to the requestor and indicates whether the transaction was processed as submitted. The response information will be "Record Updated" if the record was successfully updated with the submitted Court Segment Literal (2.051 CSL). The response information will be contained in the Action to be Taken field (2.071 ACN). Reject responses for DSPE requests where the supplied disposition information was unable to be applied to the identity will be via the ERRA TOT.

3.6.13 Biometric Image Submission (FIS)

The Biometric Image Submission Request (FIS) supports the enrollment of additional biometric imagery (fingerprints, palm prints, supplemental prints, facial photos, and iris images) and descriptive imagery (SMT photos) for an existing identity, when a search is not necessary. As has always been done in FIS processing, the quality and characteristics of tenprint fingerprint images will be evaluated against the existing composite fingerprint set for the Identity, and updates to the composite will be made appropriately. This is existing functionality used to support NFF states' submission of fingerprints for all second and/or subsequent criminal criterion offenses. However, this processing will apply to all submitters, whether NFF or not.

The submitted images will be stored in the NGI database for identification or investigative searching and will be associated with the provided Identity (UCN). Submitted imagery will also be cascaded against the appropriate unsolved file to support investigative services. When possible, users should include the Event Identifier (2.2035 EVI) from the associated original response (SRE), so that the additional biometric images may be associated with the existing EVI.

3.6.14 Biometric Image Submission Response (FISR)

The Biometric Image Submission Response (FISR) will provide details on each biometric type enrolled by a FIS. The Biometric Image Enrollment (2.2061 BIE) field will provide the Biometric Set Identifier (2.2061A BSI) and Image Type (2.2061B IMT) of each biometric set or photo that was enrolled. Where photos are enrolled, the Subject Pose (2.2061C POS) is populated for facial photos, and the Scars, Marks, and Tattoos (2.2061D SMT) information item is populated for SMT photos. The Fingerprint Images Updated (2.072 FIU) field indicates which fingers (if any) were replaced in the composite fingerprint set for the contributor-provided FBI Number/UCN (2.014 FBI). An ERRI will be returned to the user when submitted tenprints do not match the provided FBI Number/UCN (2014 FBI). If fingerprints accompanying the FIS with a palm print submission

do not match the provided FBI Number/UCN (2.014 FBI), an error response (ERRA) will be returned to the user. The Controlling Agency Identifier (2.073 CRI) is an optional field in a FIS transaction. If a CRI is not included in the FIS, the Originating Agency Identifier (ORI) will be inserted into the CRI field of the FISR.

3.6.15 Special Repository Maintenance Request (SPMNT)

The Special Repository Maintenance Request (SPMNT) is used to manage identities within the Special Population Cognizant (SPC) and Foreign Subjects of Interest (FSI) repositories. Identities may be created within an SPC using the SPMNT with a Maintenance Action Indicator (2.2052 MAI) of "ADD", while identities are created in the FSI using the FIDR TOT. SPC and FSI identities may be removed using SPMNT by supplying the FBI Number/UCN (2.014 FBI) of the identity and the Name of Designated Repository (2.098 NDR) with the "DELETE" MAI value. Values for Tier Level Indicator (2.2046) TLI, Hit Notification Indicator (2.2051 HNOTI), and/or Tier 2 Point of Contact (2.2072 POC) may be updated for an FSI identity using SPMNT with the "REPLACE" MAI value, the UCN of the identity, and the new values to be applied to the identity.

Biometric images may be removed from an SPC or FSI identity with a BDEL request containing the FBI Number/UCN (2.014 FBI) and Biometric Set Identifier (2.2029 BSI) values. Biometric images may be added to an existing SPC or FSI identity with a FIS request containing the FBI Number/UCN (2.014 FBI). Reference the BDEL and FIS descriptions for further details on the use of those TOTs.

3.6.16 Special Repository Maintenance Response (SPMNTR)

The FBI/CJIS will respond to the SPMNT with a Special Repository Maintenance Response (SPMNTR) transaction to show successful identity maintenance. The SPMNTR will contain the identification information (e.g., UCN, BSI) to specify the identity and any associated biometrics for later reference. If the images accompanying an SPMNT for identity creation do not meet FBI/CJIS CJIS image quality standards, an error response (ERRA) will be returned to the user.

3.6.17 Supervised Release Notification Request (SRNR)

The Supervised Release Notification Request (SRNR) allows an Authorized Contributor to submit supervisory maintenance requests to the FBI/CJIS electronically. The SRNR submission is used to update the Identity History record for a subject by associating supervisory information to an arrest cycle. This functionality includes the capability to cancel or transfer a supervisory information request to another supervisory agency.

Note: SRNR is a limited-use TOT that requires coordination with FBI/CJIS prior to use.

3.6.18 Supervised Release Notification Response (SRNRR)

The FBI/CJIS will respond to a successful SRNR with a Supervised Release Notification Response (SRNRR). The SRNRR provides an updated Identity History Summary which reflects the updated

supervisory information. If the SRNR is not successful, an error response (ERRA) will be returned to the user.

3.6.19 Rap Back Subsequent Subscription Request – Criminal (RBSCRM)

For an existing criminal subject with fingerprints on file with the FBI/CJIS, agencies may request Rap Back Services to be provided without resubmitting fingerprints by providing a valid FBI Number/UCN.

Any authorized agency may establish a Criminal Rap Back Subscription by submitting a criminal UCN (2.014 FBI), and the Name (2.018 NAM) and Date of Birth (2.022 DOB) of the Subscription subject. The Originating Agency Case Number (2.009 OCA), Rap Back Activity Notification Format (2.2062 RBNF) and Rap Back Category (2.2065 RBC) also must be present. The allowable criminal Rap Back Categories are:

Table 5 Rap Back Criminal Category Code Values

Rap Back Code Value	Rap Back Category Code Description
CI	Criminal Justice Investigative
CS	Criminal Justice - Supervision

Note: RBSCRM is a limited-use TOT that requires coordination with FBI/CJIS prior to use.

3.6.20 Rap Back Subsequent Subscription Request – Civil (RBSCVL)

Any authorized agency may establish a Civil Rap Back Subscription by submitting a civil UCN (2.014 FBI) and either a full Tenprint Fingerprint image set or an Event Identifier (2.2035 EVI) from a previously submitted Civil Tenprint Fingerprint Identification Search. A Subscription also requires the Name (2.018 NAM), Date of Birth (2.022 DOB) of the Subscription subject, and the Subscription Rap Back Category (2.2065 RBC). Allowable Civil Rap Back Categories are as follows:

Table 6 Rap Back Civil Category Code Values

Rap Back Code Value	Rap Back Category Code Description
I	Volunteer, Child Care/School Employee, Non-Criminal Justice Employee and Licensing
J	Criminal Justice Employee
S	Security Clearance Information Act (SCIA)

All subscriptions require the Rap Back Expiration Date (2.2015 RBXD) to be set, in order to establish the Subscription validation period.

Note: RBSCVL is a limited-use TOT that requires coordination with FBI/CJIS prior to use.

3.6.21 Rap Back Subscription Response (RBSR)

The Rap Back Subscription Response (RBSR) is the response to a Rap Back Subsequent Subscription Request. It will include all Subscription Data Fields to ensure the subscriber is aware of any system modifications that were made to the Subscription. The response will indicate whether the transaction succeeded, failed, or succeeded with changes, with an indication of any fields changed. The Identity History Summary is always returned in the response to a Civil Rap Back Subscription request due to the potential occurrence of criminal activity after the initial Tenprint Fingerprint Identification Search, during the adjudication process. If requested, the Identity History Summary is returned in the response to a Criminal Rap Back Subscription request.

3.6.22 Rap Back Maintenance Request (RBMNT)

The Rap Back Maintenance Request (RBMNT) provides the opportunity for a Rap Back Subscription Owner to modify, renew, or delete their Rap Back Subscription record information. Both the FBI Number/UCN (2.014 FBI) and Rap Back Subscription Identifier (2.2048 RBSI) are required. Rap Back Maintenance can be performed on expired or cancelled Subscriptions for a configurable time period (*60 days*) after the expiration date or cancellation date.

The following Rap Back Subscription data may be modified:

- Biographic Data – Subscription Name (2.018 NAM) and Subscription DOB (2.022 DOB)
- Rap Back Activity Notification Format (2.2062 RBNF)
- Rap Back Opt Out in-state Indicator (2.2063 RBOO)
- Rap Back Attention Indicator (2.2070 RBATN)
- Rap Back Expiration Date (2.2015 RBXD)
- Triggering Event(s) (2.2040 RBT)
- Rap Back Recipients (2.2020 RBR)
- Rap Back Disclosure Indicator (2.2067 RBDI)
- User-Defined Fields (up to 10) (2.2064 RBUD)

The type of Rap Back Maintenance the Rap Back Subscription Owner wishes to perform is signified by the Rap Back Maintenance Indicator (2.2039 RBMI), which supports the following maintenance actions: Replace, Delete, Append, Cancel, and Un-cancel.

Replace

The matching Rap Back Subscription will be updated with Rap Back Subscription Data provided in the request. The data fields that can be replaced are: Name (2.018 NAM), Date of Birth (2.022 DOB), Rap Back Activity Notification Format (2.2062 RBNF), Rap Back Opt-Out In State Indicator (2.2063 RBOO), Rap Back Attention Indicator (2.2070 RBATN), Rap Back Expiration Date (2.2015 RBXD), Rap Back Trigger (2.2040 RBT), Rap Back Recipient (2.2020 RBR), Rap Back Disclosure Indicator (2.2067 RBDI), and Rap Back User-Defined (2.2064 RBUD).

Delete

Any subscription data provided in the request will be removed from the matched Rap Back Subscription. If a required Rap Back Subscription Data field is provided with a Delete, the request will be rejected. The only Rap Back Subscription Data that can be deleted are: Rap Back Triggering Events (2.2040 RBT), Rap Back Recipient (2.2020 RBR), Rap Back User-Defined (2.2064 RBUD) field, Rap Back Attention Indicator (2.2070 RBATN).

Append

Provided data will be appended to the matched Rap Back Subscription. The data that can be appended are: Rap Back Triggering Events (2.2040 RBT), Rap Back Recipient (2.2020 RBR), and Rap Back User-Defined (2.2064 RBUD).

Cancel

The matched Rap Back Subscription will be cancelled. The only Rap Back fields needed to cancel a Subscription are the FBI Number/UCN (2.014 FBI) and the Rap Back Subscription Identifier (2.2048 RBSI). Any other data fields provided will be ignored. If the Subscription has already been cancelled or expired, the request will be rejected with the response that an active Rap Back Subscription does not exist for the UCN/Rap Back Subscription Identifier (2.2048 RBSI).

Renew (Currently Not Used)

Renew is only applicable for Rap Back Subscriptions with a "Civil" Rap Back Category (2.2065 RBC) and a non-lifetime term; the matching Rap Back Subscription will be renewed for another term equal to the original term. As there are currently no fees associated with the Rap Back Services, the renew maintenance indicator is not being used at this time.

Un-cancel

If a Subscription was erroneously cancelled, the Subscription can be un-cancelled for a configurable time period (*60 days*) after the cancel date. The Rap Back fields needed to reactivate a cancelled Subscription are the FBI Number/UCN (2.014 FBI) and Rap Back Subscription Identifier (2.2048 RBSI).

3.6.23 Rap Back Maintenance Response (RBMNTR)

The Rap Back Maintenance Response (RBMNTR) is returned by the FBI/CJIS in response to a Rap Back Maintenance Request. Responses will contain all Rap Back Subscription Data Fields and indicate if the transaction completed successfully, failed, or completed with modifications. Appendix M contains further details on contents of the Status/Error Message (2.060 MSG) field for error conditions.

For transactions renewing Rap Back Subscriptions which are past the expiration date or reactivating cancelled Subscriptions, an Identity History Summary will be included in the response due to the potential occurrence of criminal activity during the configurable time period (*60 days from the date the subscription expired or was cancelled*).

3.6.24 External System Link Activity Request (XACT)

The External System Link Activity Request (XACT) is sent to the FBI/CJIS by external identification systems to notify the FBI/CJIS of activity on an External Subject Identifier (2.2037 ESI) that is associated with an Identity within the NGI repository. NGI uses these external system messages to trigger notifications to authorized contributors.

XACT messages will be rejected and an ERRA returned if the External Subject Identifier provided does not exist in the FBI/CJIS repository. This reject reason will be included in the Status/Error Message (2.060 MSG) field of the ERRA when an XACT message is rejected.

3.6.25 External System Link Activity Response (XACTR)

An External System Link Activity Response (XACTR) is returned to the external system upon successful processing of an XACT request.

3.6.26 External System Link Maintenance Request (XMNT)

The External System Link Maintenance Request (XMNT) is used by external identification systems to delete or modify the External Subject Identifier (2.2037 ESI) that is associated with an Identity within the NGI repository.

XMNT messages will be rejected and an ERRA returned for the following reasons:

- The External Subject Identifier provided is already associated with another UCN.
- The specified FBI Number/UCN does not exist in FBI/CJIS repositories.

The reject reason will be included in the Status/Error Message (2.060 MSG) field of the ERRA when an XMNT message is rejected.

3.6.27 External System Link Maintenance Response (XMNTR)

An XMNTR is returned to the external system upon successful processing of an XMNT request.

3.7 Error Message Format

When a transmission is rejected because one or more data fields does not pass internal editing criteria, an error response will be transmitted back to the submitting agency. Each reason for rejection will be detailed in the Status/Error Message (2.060 MSG) field. Up to 11 errors for a transaction can be recorded in the MSG field. If the error is related to a field that contains invalid

data, the field tag and first 30 characters of the data in the invalid field will be returned.

The FBI/CJIS will validate all incoming data prior to its use within the system. If any mandatory data are missing the transaction will be rejected. If any optional data are in error, the data will not be stored in the FBI/CJIS repository.

The error response will be included in the appropriate error transaction. The following is a non-exhaustive list of the types of error messages:

- Mandatory field missing
- Invalid field for transaction
- Field discrepancy
- Field out of range
- Request not on file
- Fingerprints do not allow extraction of characteristics
- Non-standard native-mode fingerprint characteristics
- Inadequate quality of biometrics

The following are unique types of error responses:

- Tenprint Transaction Error Response (ERRT)
- Latent Transaction Error Response (ERRL)
- Biometric Search Error Response (ERRB)
- Information Transaction Error Response (ERRI)
- Administrative Transaction Error Response (ERRA)
- Transaction Error (Electronic Response) (ERRR)
- External Query History Error Response (EQER)

The field requirements for these error messages are detailed in Tables D-1, E-1 and I-1.

Appendix M contains further details on contents of the Status/Error (2.060 MSG) field for error conditions.

3.8 Other Special Requirements for Communicating with the FBI/CJIS

3.8.1 Electronic Fingerprint Images

Electronic fingerprint images must be captured and transmitted to the FBI/CJIS in accordance with the American National Standard for Information Systems - Data Format for the Interchange of Fingerprint, Facial & Other Biometric Information (ANSI/NIST-ITL).

Tenprint images in EBTS transactions shall be in Type-4 (500ppi) or Type-14 (either 500ppi or 1000ppi) records. Exemplar palm print images (including supplemental rolled thenar) shall be in Type-15 records (either 500ppi or 1000ppi). Supplemental finger images (exemplar lower joint and extreme tips) shall be in Type-14 records (either 500ppi or 1000ppi).

Latent images shall be transmitted in Type-4, Type-7, or Type-13 records. Latent finger images may be transmitted in Type-4 records if the images are 500ppi and are within the size requirements specified in the Fingerprint Image Size Requirement section. Latent finger or palm images of any size and either 500ppi or 1000ppi may be transmitted in Type-7 or Type-13 records.

3.8.2 Fingerprint Image Compression/Decompression Algorithm

IAFIS-IC-00110 (V3.1), Criminal Justice Information Services (CJIS) Wavelet Scalar Quantization (WSQ) Grayscale Fingerprint Image Compression Specification, dated October 4, 2010, provides the definitions, requirements, and guidelines for specifying the FBI/CJIS WSQ compression algorithm. The document specifies the class of encoders required, decoder process, and coded representations for compressed image data. Refer to this specification for an informative overview of the elements of the algorithm. Latent images are not to be lossy compressed.

The FBI/CJIS is responsible for maintaining a registry of approved compression algorithms and assigning a value to each, as shown in the Compression Algorithm Values table below. This value is to be used in the Type 4 or Type-14 Logical Record so the receiving agency can use the appropriate decompression algorithm to decode the image data. The Color and Grayscale Compression Algorithm (CGA) field is used to specify the compression algorithm used (if any). The following table indicates the acceptable values for this field, although not all values apply to all record types. The FBI/CJIS expects 500 ppi scanned Type-4 or Type-14 tenprint images, as well as 500 ppi Type-15 palm print images, to be compressed with the WSQ compression algorithm using a bit rate set to 0.75 (resulting in a nominal compression ratio of 15-to-1). The FBI/CJIS expects Type-10 photo images to be compressed with the JPEGB algorithm. FBI/CJIS will accept fingerprint and palm print images scanned at 500 and 1000 ppi. Per NIST Special Publication 500-289 guidance, the FBI/CJIS expects that Type-14 and Type-15 1000 ppi exemplar friction ridge imagery will be compressed using the JPEG-2000 lossy compression (JP2) at a target ratio of 10:1. If required, latent friction ridge imagery at 1000 ppi will be compressed using the JPEG-2000 lossless compression filter according to the guidance in SP500-289. Exemplar friction ridge imagery at 1000 ppi may be converted to 500 ppi for the purposes of backwards compatibility using the Gaussian downsampling strategy provided in SP500-289. The table will be updated when new algorithms are approved by the FBI/CJIS.

Table 7 Compression Algorithm Values

Compression Algorithm	Binary Value	ASCII Code
None Used (Uncompressed)	0	NONE
Wavelet Scalar Quantization (WSQ) FBI/CJIS Revision 2.0 WSQ Version 3.1 or higher is recommended (Version 2.0 or Version 3.0 may be used for platen areas less than 2 inches in height)	1	WSQ20
JPEG ISO/IEC 10918 (Lossy)	2	JPEGB
JPEG ISO/IEC 10918 (Lossless)	3	JPEGL
JPEG 2K ISO/IEC 15444-1 (Lossy)	4	JP2
JPEG 2K ISO/IEC 15444-1 (Lossless)	5	JP2L

3.8.3 FBI/CJIS Image Quality Specifications

The FBI/CJIS Image Quality Specifications are provided in Appendix F.

3.8.4 Fingerprint Image Size Requirements

The scanned fingerprint image sizes shown in the following table are consistent with standard fingerprint cards or common live-scan images. To accommodate live-scan equipment, where the platen size can exceed these measurements, FBI/CJIS will accept images larger than these. However, when oversize images are returned to a contributor, it is the receiver's responsibility to manage the display of these oversize images.

Table 8 Recommended Sizes for Fingerprint

Fingerprint	Width Pixels (Inches)	Height Pixels (Inches)
Rolled Impression Fingers 1-10 (@ 500 ppi)	800 (1.6)	750 (1.5)
Rolled Impression Fingers 1-10 (@ 1,000 ppi)	1,600 (1.6)	1,500 (1.5)
Plain Thumb Impression (@ 500 ppi)	500 (1.0)	1,000 (2.0)
Plain Thumb Impression (@ 1,000 ppi)	1,000 (1.0)	2,000 (2.0)
4 Finger Plain Impressions (@500ppi)	1,600 (3.2)	1,500 (3.0)
4 Finger Plain Impressions (@ 1,000ppi)	3,200 (3.2)	3,000 (3.0)

3.8.5 Bulk Submissions

Bulk submissions of EBTS compliant files will be accepted and processed by the FBI/CJIS. Collections of EBTS files may be submitted to the FBI/CJIS on encrypted removable media. For example, a contributor that wishes to augment the FBI/CJIS repository with a backlog of biometric imagery (e.g., palm prints, face images, iris images, etc.) may want to submit a collection of FIS transactions outside of the normal communication mechanism to avoid saturation of network lines and/or avoid impacts to normal submission processing. As another example, a contributor may perform a one-time "startup" enrollment of a large number of identities into the Rap Back service by submitting a collection of RBSCRM or RBSCVL transactions. As a final example, a contributor may perform a bulk disposition update by submitting a collection of DSPE transactions.
Bulk submissions require prior coordination with the FBI/CJIS. Please contact your assigned FBI/CJIS representative if you wish to use the bulk submission capability.

Appendix A: Transaction Response Times

Table A-1 represents maximum response times for incoming electronic transactions. NGI transaction response times listed are from receipt of transaction until transmission of response. NGI is not responsible for transaction processing or transmission times by external systems. Table A-2 represents types of transactions by service. The 1.006 PRY field (see definition of PRY in American National Standards Institute/National Institute of Standards and Technology - Information Technology Laboratory (ANSI/NIST-ITL) corresponds to the Priority column in Table A-1 for transactions which will process based on priority, and this field will be used to prioritize all transaction types, including investigative. PRY is not applicable to transaction types with no values in the priority column of table A-1.

Table A-1 NGI Maximum Transaction Response Times

Transaction	Priority	10 sec	20 sec	30 sec	2 min	5 min	10 min	15 min	30 min	1 hour	2 hours	4 hours	24 hours	48 hours	15 days
Criminal Fingerprint Identification Search	high (1)						•								
	routine (5)								•						
	low (7)												•		
	non-urgent (9)														•
Civil Fingerprint Identification Search	high (1)							•							
	routine (5)										•				
	low (7)												•		
	non-urgent (9)														•
Friction Ridge Investigation Search - Tenprint	high (1)			•											
	routine (5)				•										
	low (7)								•						
Friction Ridge Investigation Search - Latent	high (1)									•					
	routine (5)											•			
	low (7)												•		
Biometric/Biographic Maintenance								•							
Biometric Audit Trail Retrieval								•							
Biometric Image Retrieval, multiple UCN														•	
Biometric Image Retrieval, single UCN						•									
Biographic Search					•										
Cascaded Facial Recognition Search													•		
Cascaded Fingerprint Search													•		

Table A-1 NGI Maximum Transaction Response Times

Transaction	Priority	10 sec	20 sec	30 sec	2 min	5 min	10 min	15 min	30 min	1 hour	2 hours	4 hours	24 hours	48 hours	15 days
Cascaded Iris Search (Future Capability)													•		
Cascaded Palm Print Search													•		
Cascaded Supplemental Fingerprint & Palm Print Search													•		
Disposition Fingerprint Search													•		
Disposition Maintenance													•		
Disposition Submission													•		
Facial Recognition Search											•				
Link Maintenance from External								•							
Provide Notifications						•									
Rap Back Subscription Request								•							
Rap Back Subscription List Retrieval								•							
Rapid Fingerprint Identification Search, Identity info			•												
Rapid Fingerprint Identification Search, no Identity info		•													
Rapid Tenprint Fingerprint Identification		•													
Supplemental Fingerprint and Palm Print Maintenance								•							
Text-Based Facial Photo Search								•							
Text-Based SMT Photo Search								•							
Verification Request								•							

Table A-2 NGI Type of Transaction By Service

SERVICE	TRANSACTION	TOT	DESCRIPTION
Identification Services	Civil Fingerprint Identification Search	AMN	Amnesia Victim
		DEK	Known Deceased
		DEU	Unknown Deceased
		DOCE	Departmental Order Channeling Electronic
		EMUF	Electronic In/Manual Out User Fee Submissions
		FANC	Federal Applicant (No Charge)
		FAUF	Federal Applicant User Fee
		FNDR	Federal No Charge Direct Route
		MAP	Miscellaneous Applicant Civil
		MPR	Missing Person
		NFUE	Non-Federal User Fee Expedite
		NFUF	Non-Federal Applicant User Fee
		NNDR	Non-Federal No Charge Direct Route
	Criminal Fingerprint Identification Search	CAR	Criminal Tenprint Submission (Answer Required)
		CNA	Criminal Tenprint Submission (No Answer Necessary)
		CPDR	Criminal Fingerprint Direct Route
		CPNU	Criminal Fingerprint Processing Non-Urgent
		FIDR	Foreign Information Direct Route
	Latent Fingerprint Identification Submission	LFS	Latent Fingerprint Image Submission
	Disposition Fingerprint Search	FDSP	Electronic Fingerprint Disposition Submission
	Iris Image Identification Search (Future Capability)	IIDS	Iris Image Identification Submission
	Rapid Fingerprint Identification Search	RPIS	Rapid Fingerprint Identification Search
Information Services	Biometric/Biographic Audit Trail Retrieval	BATQ	Biometric Audit Trail Query
	Biometric Image Retrieval	CPR	Subject Photo Request
		IRQ	Biometric Image/Feature Retrieval Request
	Rap Back Subscription List Retrieval	RBRPT	Rap Back Subscription List Request
	Rap Back Information Retrieval Submission	RBIHS	Rap Back Identity History Summary Request

Table A-2 NGI Type of Transaction By Service

SERVICE	TRANSACTION	TOT	DESCRIPTION
Investigation Services	Biographic Search	EQHR	External Query History Request
	Facial Recognition Search	FRS	Facial Recognition Search Request
	Fingerprint Investigation Search	TPIS	Tenprint Fingerprint Image Search
		TPRS	Tenprint Rap Sheet Search Request
	Iris Image Investigative Search (Future Capability)	IIIS	Iris Image Investigative Search
	Latent Search	LFFS	Latent Friction Ridge Features Search
		LFIS	Latent Friction Ridge Image Search
		LPNQ	Latent Penetration Query
		LRSQ	Latent Repository Statistics Query
	Text-Based Facial/SMT Photo Search	TXTSRCH	Text-Based Facial/SMT Photo Search
Notification Services	Provide Notifications	RBN	Rap Back Activity Notification
		RBRN	Rap Back Renewal Notification
		SPN	Special Population Cognizant Notification
		UBM	Unsolved Biometric Match
		UHN	Unsolicited Hit Notification
		ULM	Unsolved Latent Match
		UUBD	Unsolicited Unsolved Biometric Delete
		UULD	Unsolicited Unsolved Latent Delete

Table A-2 NGI Type of Transaction By Service

SERVICE	TRANSACTION	TOT	DESCRIPTION
Data Management Services	Biometric/Biographic Maintenance	BDEC	Biometric Decision Submission
		BDEL	Biometric Delete Request
		CDEL	Civil Event Deletion Request
		CPD	Subject Photo Delete Request
		FIS	Biometric Image Submission
		RBMNT	Rap Back Maintenance Request
		RBSCRM	Rap Back Subsequent Subscription Request - Criminal
		RBSCVL	Rap Back Subsequent Subscription Request - Civil
		SPMNT	Special Repository Maintenance Request
		ULD	Unsolved Latent Record Delete
	Disposition Maintenance	DSPE	Disposition File Maintenance Submission
	Link Maintenance from External	XACT	External System Link Activity Request
		XMNT	External System Link Maintenance Request
	Supervised Release Notification Request	SRNR	Supervised Release Notification Request
Verification Services	Fingerprint Verification Request	FVR	Fingerprint Verification Request
Table A-2 shows the Types of Transaction (TOT) by service in relation to Table A-1. The transaction columns from each table link the two together.			

Appendix B: Descriptors And Field Edit Specifications For Type-1 Logical Records

This appendix will contain the descriptions and field specification for the Type-1 logical record included with a transaction being submitted. Each transaction is required to have a Type-1 record. Each traditionally-encoded field shall begin with the number of the record type, followed by a period, followed by the appropriate field number, followed by a colon. Multiple information items within a field or subfield shall be separated by the {US} separator; multiple subfields shall be separated by the {RS} separator; and information fields shall be separated by the {GS} separator. Immediately following the last information field in the Type-1 logical record, an {FS} separator character shall be used to separate it from the next logical record. The Type-2 record, defined in Appendix C, shall follow the Type-1 record. As NGI will be accepting this record as defined in the ANSI/NIST-ITL, refer to the ANSI/NIST-ITL for complete usage and descriptions of the Type-1 fields. Any information that is outlined below is an FBI-specific requirement for the Type-1 record.

Type-1 Data Dictionary

The Type-1 Data Dictionary for this appendix only includes those fields that have been constrained by NGI functionality. All other fields defined in the ANSI/NIST-ITL will be used as defined in that standard.

TOT 1.004 Type of Transaction

This mandatory field shall contain an identifier, designating the type of transaction and subsequent processing that this logical file should be given.

DAI 1.007 Destination Agency Identifier

This mandatory field shall contain the identifier of the administration or organization designated to receive the transmission. The size and data content of this field shall be defined by the user and be in accordance with the receiving agency. This field shall be a nine-byte alphanumeric field. Must be an ORI.

ORI 1.008 Originating Agency Identifier

This mandatory field shall contain the identifier of the administration or organization originating the transaction. For EBTS purposes, this field shall be a nine-byte alphanumeric field. The first two characters shall be a valid POB code and the entire ORI shall validate to an authorized FBI ORI. Note: In a submission to the FBI, the submitting agency (usually the CJIS Systems Agency (CSA)) is the ORI and the FBI is the DAI, while the FBI's response to the submission will show the FBI as the ORI and the submitting agency as the DAI. (See also Appendix C for the definition of CRI.)

TCN 1.009 Transaction Control Number

This mandatory field shall contain the Transaction Control Number as assigned by the originating agency. A unique control identifier shall be assigned to each transaction. For any transaction that requires a response, the respondent shall refer to this identifier in communicating with the originating agency. This field shall be a 10- to 40-byte alphanumeric-special (ANS) field.

NSR 1.011 Native Scanning Resolution

This mandatory field shall specify the nominal scanning resolution of the AFIS or other image capture device supported by the originator of the transmission. This field permits the recipient of this transaction to send response data at a transmitting resolution tailored to the NSR (if it is able to do so) or to the minimum scanning resolution. This field shall contain five bytes specifying the native scanning resolution in pixels per millimeter. The resolution shall be expressed as two numeric characters followed by a decimal point and two more numeric characters (e.g., 20.00). This field is needed because the interchange of fingerprint information between systems of the same manufacturer may, in some instances, be more efficiently done at a transmitting resolution equal to the native scanning resolution of the system rather than at the minimum scanning resolution

specified in this standard. This field currently applies only to Type-4 and Type-7 record. For those logical files that contain their own scanning resolution, this field shall be set to '00.00'. A single transaction can only contain multiple Type-4 and/or Type-7 records if all images have the same resolution.

NTR 1.012 Nominal Transmitting Resolution

For EBTS transactions, this mandatory field shall specify the nominal transmitting resolution for fingerprint images transmitted in Type-4 or Type-7 records. This field shall contain five bytes specifying the transmitting resolution in pixels per millimeter. The resolution shall be expressed as two numeric characters followed by a decimal point and two more numeric characters (e.g., 19.69). For Type-4 records, the transmitting resolution shall be 495-505ppi (500+-1%); for Type-7 records, the transmitting resolution shall either be 495-505ppi (500+-1%) or 990-1010ppi (1000+-1%). For transactions that do not contain Type-4 or Type-7 fingerprint image records, this field shall be set to "00.00"." A single transaction can only contain multiple Type-4 and/or Type-7 records if all images have the same resolution.

DOM 1.013 Domain Name

This field will be required for all new implementations of the CJIS EBTS transactions. This mandatory field identifies the domain name for the user-defined Type-2 logical record implementation, and may only appear once within a transaction. It shall consist of two information items. The first information item will uniquely identify the agency, entity, or implementation used for formatting the tagged fields in the Type-2 record. A mandatory second information item will contain the unique version of the particular implementation. The default value when submitting the traditionally-encoded version to CJIS for the field shall be the North American Domain implementation and shall appear as "1.013:NORAM{US}EBTS #.# {GS}" where the #.# is the major and minor version number of the EBTS that is being used (e.g., 10.0).

Appendix C: Descriptors And Field Edit Specifications For Type-2 Logical Records

This appendix contains the descriptions and field specifications for the Type-2 record being included with a transaction being submitted. The Data Dictionary in this appendix has been organized to display Identifier, Field Number, Field Name, and Field Description.

1.0 User-Defined Data

Table C-1 summarizes the content of each of the fields in the Type-2 record in the traditional encoding format. The field sizes do not account for any separator characters. Some Type-2 elements have their origins as contributor-supplied data. User-defined data is that subset of contributor-supplied data that will not be stored in any CJIS files for later search or retrieval purposes. User-defined data will not be validated (with several exceptions), and therefore may in general consist of any printable 7-bit ASCII character: (i.e., free-text). This includes ASCII (decimal) codes 07 (BEL) through 13 (CR) and 32 (SP) through 127 (DEL), inclusive. Separator characters are not part of the printable character set. The 7-bit ASCII characters used in NGI elements include the alphabet [upper case (capital letter) and lower case (small letter)], number 0 through 9, special characters, and nonprintable characters. Nonprintable characters are defined as codes 07 through 13. For additional information, reference 7-Bit ASCII guidance in ANSI/NIST-ITL 1-2011.

The following list gives those Type-2 elements that the FBI treats as being user-defined: ATN, SCO, OCA, SID, OCP, EAD, RES, CRI, IMA, CIDN, and TAA. In this list, SID, TAA, and CRI may not always be free-text. In criminal transactions, these fields must contain valid formats, as specified further in this appendix. Occasionally, other restrictions are specified as required in the Data Dictionary section. If the contributor supplies data in any of these fields in a submission or search, the data will be returned in the corresponding response.

The RAP, RET, REC, TAA, and ULF are examples of flag fields taking values of positive = “Y” and negative = “N.” The negative value should not, in general, be submitted unless otherwise described in a specific definition.

1.1 Date Fields

Traditional dates are represented as follows:

A date is shown as an 8-digit numeric field of the format CCYYMMDD, where:
CC (Century) must be 19 or 20
YY (Year) must be 00 to 99
MM (Month) must be 01 to 12
DD (Day) must be 01 to the limit defined by the month and year (e.g., DD may be 29 for MM = 02 in leap years).

For example 19921201 represents December 1, 1992.

Partial dates, where allowed, are represented by inserting zeroes into the unknown positions. For example 20010000 represents the year 2001.
Since dates find a variety of uses in EBTS transactions, each use may have specific format restrictions or special edits. For specific format restrictions or special edits, see the individual date field entries in this appendix.

1.2 XML Encoding

The XML encoding requires some deviations from the traditional format, in both structure and content. Structurally, elements with multiple data items that are traditionally represented as a single concatenated string are instead placed in separate fields. For example, an entire name would be held in a single string in AKA in the legacy format, while the XML encoding would break this into separate elements for First, Middle, and Last.

Additionally, data items that are related and/or have dependencies on one another may be represented by a nested XML structure, in order to convey this relationship. In regards to content, the XML encoding has a few differences from the traditional format in the allowed data, for example “flag” values are represented as Boolean, “true” and “false.”

Type-2 Data Dictionary

The Type-2 Data Dictionary for this appendix only includes those fields that have been defined to support NGI functionality. All other fields defined in the ANSI/NIST-ITL will be used as defined in that standard.

ACN 2.071 Action to be Taken

This field is used to include text answers to submission requests to indicate that a latent case will be established or to indicate recommendations for further actions within response transactions. This field will also be used to indicate action taken by the FBI in response to electronic document (e.g., disposition) submissions. For this field, commas, hyphens, ampersands, slashes, number signs, underscores, and spaces are all allowed as special characters.

AGR 2.023 Age Range

This field will be used to give an estimated age range may be entered using a pair of two digit age numbers. For the traditional encoding of this field, the first two digits shall represent the minimum age, and the second two the maximum age. There shall be no separator character used between the ages.

AKA 2.019 Aliases

This 3-to-50 alphaspecial (AS) field contains alias names of the subject. Up to ten aliases may be provided.

For the traditional encoding of this field, each alias will be separated from one another by the {RS} character. AKA may contain a comma, hyphen, or spaces as special characters. The format shall be the surname followed by a comma, followed by the given names separated by a space. The following restrictions and exceptions to the general format apply (the first three apply only to the traditional encoding):

1. Minimum length is three bytes in the following sequence: alphabetic, comma, alphabetic.
2. A comma must be followed by a minimum of one alphabetic character.
3. A space immediately before or after comma is invalid.
4. A hyphen in first and last position of any name segment is invalid.
5. Two consecutive spaces or hyphens between characters are invalid.

AMP 2.084 Amputated or Bandaged

This repeating field contains information about amputated or bandaged fingerprints in an EBTS submission. The field is composed of repeating sets of two information items:

A. Finger Position (FGP)
B. Amputated Or Bandaged Code (AMPCD)

This field is to be used any time there are fewer than ten printable fingers in a tenprint submission for finger positions 1 – 10 or positions 11–15 to specify when no slap fingerprint images are provided in the finger positions (e.g., entire right hand is not printed). A partially amputated finger should be printed and be marked amputated, XX. If the finger's image is missing for any reason, (for example, when the arresting agency did not specify a reason in its submission to the State Identification Bureau) the UP code should be used. This field is used to tell the AFIS which finger positions need to be characterized. The UP code should only be used when the entire image is not provided for fingerprints in the submission. This code will indicate that the AFIS matcher should ignore this image and not include the image in the matching process. When submitting transactions with Type-14 records, the Type-2 AMP (2.084) field should be used to indicate when there is an image missing (e.g., an entire slap); the Type-14 AMP (14.018) field should be used to indicate a missing or bandaged finger within an image (e.g., a missing index finger in a slap image).

For the traditional encoding, the two-character finger position code is followed by the {US} separator and the amputated or bandaged code. Each set of fingers/amp codes shall be separated by the {RS} separator.

The following example indicates that the third finger is amputated and that the ninth finger print was unavailable or not submitted.
2.084:03{US}XX{RS}09{US}UP{GS}

Table 9 AMP Codes Table

Finger Position	FGP
Right thumb	01
Right index	02
Right middle	03
Right ring	04
Right little	05
Left thumb	06
Left index	07
Left middle	08
Left ring	09
Left little	10
Plain right thumb	11
Plain left thumb	12
Plain right four fingers	13
Plain left four fingers	14
Plain left and right thumbs	15

Note: When codes 13 – 15 are included, the entire block is referenced.

Descriptor	AMPCD
Amputation	XX
Unable to print (e.g., bandaged)	UP

ASL 2.047 Arrest Segment Literal

This field is made up of the following information items:
A. Date of Offense (DOO)
B. Arrest Offense Literal (AOL)

The AOL is a free-text description of an offense charged on an arrest. The first character of the AOL text must not be a space. Each AOL should have a corresponding DOO. The DOO shall appear as an eight-digit number as specified in Section 1.1 of this appendix. The DOO shall not exceed the current date. This date field shall contain the local date for the region submitting the request. Up to 999 occurrences of the ASL are allowed.

For the traditional encoding format, each occurrence of the ASL shall be separated by the {RS} separator character. The DOO shall be separated from the AOL by the {US} separator character. A DOO is prohibited without a corresponding AOL offense. If a DOO is not present, a {US} character separator shall still be used.

The following traditional coding example indicates more than one occurrence of the AOL field using DOO:

2.047:19940915{US}DUI{RS}19940920{US}POSSESSION OF FIREARMS{GS}

ATN 2.006 "Attention" Indicator

This alphanumeric-special field shall contain a designation of the individual to whose attention a response is to be directed. Periods shall not be used (e.g., Det. J. Q. Public shall be entered as DET J Q PUBLIC). The value of ATN returned to the submitter is the value submitted.

ATR 2.2032 Audit Trail Record

This repeating record contains the information associated with the dissemination of the owner's images. The following are the items included for each requested image:

A. ORI of the originator that received the image,
B. Date the images were disseminated,
C. TOT used to acquire the image set,
D. BSI of the image,
E. IMT of the image,
F. FNR of the image (supports fingerprint and palm print position codes),
G. PPD of the supplemental image when FNR equals supplemental (19),
H. POS of facial image,
I. SMT code of SMT images.

The FNR and PPD items are present in ATR to identify the image within the biometric set that was disseminated when the entire set was not returned.

BIA 2.2031 Biometric Image Available

This field will indicate the existence of available biometric images (fingerprint, palm print, supplemental print, and facial photo) and descriptive images (SMT photo) for an Identity in the NGI repository.

Allowable BIA values are shown in the following table. The following abbreviations are used in the table for each image type: FP – Fingerprint, PP – Palm Print, SP – Supplemental Print, PHF – Photo Facial, PSMT – Photo Scar, Mark, & Tattoo and IRIS – Iris.

Table 10 BIA Values Table

Biometric Image(s) Available	Value	Biometric Image(s) Available	Value
None and/or Unsolved	0	IRIS	32
FP	1	FP, IRIS	33
PP	2	PP, IRIS	34
FP, PP	3	FP, PP, IRIS	35
SP	4	SP, IRIS	36
FP, SP	5	FP, SP, IRIS	37
PP, SP	6	PP, SP, IRIS	38
FP, PP, SP	7	FP, PP, SP, IRIS	39
PHF	8	PHF, IRIS	40
FP, PHF	9	FP, PHF, IRIS	41
PP, PHF	10	PP, PHF, IRIS	42
FP, PP, PHF	11	FP, PP, PHF, IRIS	43
SP, PHF	12	SP, PHF, IRIS	44
FP, SP, PHF	13	FP, SP, PHF, IRIS	45
PP, SP, PHF	14	PP, SP, PHF, IRIS	46
FP, PP, SP, PHF	15	FP, PP, SP, PHF, IRIS	47
PSMT	16	PSMT, IRIS	48
FP, PSMT	17	FP, PSMT, IRIS	49
PP, PSMT	18	PP, PSMT, IRIS	50
FP, PP, PSMT	19	FP, PP, PSMT, IRIS	51
SP, PSMT	20	SP, PSMT, IRIS	52
FP, SP, PSMT	21	FP, SP, PSMT, IRIS	53
PP, SP, PSMT	22	PP, SP, PSMT, IRIS	54
FP, PP, SP, PSMT	23	FP, PP, SP, PSMT, IRIS	55
PHF, PSMT	24	PHF, PSMT, IRIS	56
FP, PHF, PSMT	25	FP, PHF, PSMT, IRIS	57
PP, PHF, PSMT	26	PP, PHF, PSMT, IRIS	58
FP, PP, PHF, PSMT	27	FP, PP, PHF, PSMT, IRIS	59
SP, PHF, PSMT	28	SP, PHF, PSMT, IRIS	60
FP, SP, PHF, PSMT	29	FP, SP, PHF, PSMT, IRIS	61
PP, SP, PHF, PSMT	30	PP, SP, PHF, PSMT, IRIS	62
FP, PP, SP, PHF, PSMT	31	FP, PP, SP, PHF, PSMT, IRIS	63

BID 2.2028 Biometric Image Description

This repeating set contains information about biometric images the user requests in the submission. Each repeating set consists of the following items:

A. SI (Subject Identifier) of the identity or latent record,
B. IMT image type of the image to be retrieved,
C. BSI of the biometric set to be retrieved,
D. FNR is the fingerprint or palm print position code of the image to be retrieved,
E. PPD of the supplemental image to be retrieved when FNR equals supplemental (19).
F. POS of a face image,
G. SMT code for a scar, mark, or tattoo image.

The Image Type information items (2.2028B IMT) can be used to specify which types of biometric sets are requested, the Biometric Set Identifier (2.2028C BSI) information item can be used to identify the specific biometric set being requested, and the Print Position Descriptors (2.2028E PPD) information item can be used to accompany the FNR (2.2028D) information item to specify which Supplemental Fingerprint and Palm Print images are being requested. The POS (2.2028F) information item specifies the subject pose code of the facial photo image to be retrieved.

The SMT (2.2028G) information item holds the NCIC designation code for a scar, mark, or tattoo. The SMT is required when an SMT image is to be retrieved. If the BSI (2.2028C) information item is not present, the representative biometric set(s) are retrieved for the identity specified in the Subject Identifier (SI) item. The representative set for fingerprints will be a composite fingerprint set of images, while the representative set of palm prints or supplemental fingerprint and palm print will be the latest set enrolled.

Table 11 BID Submitted Values and Results Table

BID Field Values Submitted	Biometric Images Returned
IMT	Representative set for image type specified
BSI	Specific image set indicated by the BSI
IMT, FNR	The friction ridge position image of the representative set for the image type specified
BSI, FNR	The finger position image of the specific image set indicated by the BSI

BIE 2.2061 Biometric Image Enrollment

The Biometric Image Enrollment field will provide the Biometric Set Identifier (BSI) and Image Type (IMT) of each biometric set or photo that was enrolled. Where photos are enrolled, the Subject Pose (POS) is populated for facial photos, and the scars, marks, and tattoos (SMT) field is populated for SMT photos. The following are the items included for each enrollment, as appropriate:

A. BSI of the image
B. IMT of the image
C. POS of the subject for a facial photo
D. SMT NCIC code for an SMT image

BIL 2.2073 Biometric Image List

BIL is added to the SRB to provide capture dates for all facial and SMT photos for each subject in the candidate list. This repeating set of data elements provides the identifiers necessary to retrieve this additional imagery via IRQ. This field is only populated for a facial investigative search; it is not populated for text based searches. The data elements within BIL are:

A. SI (Subject Identifier) of the candidate
B. BSI (Biometric Set Identifier) of the available image
C. BCD (Biometric Capture Date) of the available image
D. IMT (Image Type) of the available image. The only valid values for IMT (2.2073D) are face or SMT.

BSI 2.2029 Biometric Set Identifier

This numeric field will uniquely identify each biometric image set or photo, such as a facial photo, a fingerprint set, a palm print set, or a supplemental print set.

CAN 2.064 Candidate List

This grouped field shall contain a candidate list. It is composed of two information items:

A. Universal Control Number (UCN)
B. Name (NAM)

For traditional encoding, each field will be separated by a {US} separator and will be provided for each candidate in the list. Commas, hyphens, and spaces are allowed in the NAM subfield as specified in the Personal Descriptors within the NCIC Code Manual. Each UCN and NAM set shall be separated from the next by the {RS} separator character.

Note: The UCN can contain an FBI number if appropriate for that record.

CIDN 2.2022 Contributor Assigned Identification Number

This field is the unique number assigned to a single biographic search by the contributor. This field shall contain ten bytes of alphanumeric data. This is a field in a Type-2 biographic search request (EQHR).

CIN 2.010 Contributor Case Identifier Number

This grouped free-text field is a 48 byte (maximum) alphanumeric-special assigned by the contributor to uniquely identify a latent case. It consists of:

A. Literal subfield Contributor Case Prefix (CIN_PRE) of up to 24 characters (e.g., “Incident #,” “Laboratory Number,” “Investigation No.”)
B. The Contributor Case Identifier subfield (CIN_ID) of up to 24 characters.

CIX 2.011 Contributor Case Identifier Extension

This field is a two-byte to four-byte numeric supplement to the Case Identifier Number that allows multiple searches to be associated with the same case. The CIX shall be used only in conjunction with the CIN.

CNL 2.2033 Candidate Investigative List

This field is added to the Investigative search response TOTs, providing a candidate list that supports a multi-biometric type and multi-event repository. The legacy CAN field in the SRL is still supported as well for Fingerprint-only candidate lists. It is possible for the CNL to contain multiple ranked lists concatenated together due to multiple biometric types being searched. For friction ridge, NGI supports three biometric types for a latent investigative search: fingerprint, upper-palm, and lower-palm. Therefore, an SRL can contain one, two, or three ranked lists where the number of candidates in each list is determined by the NCR from the request. Therefore, the maximum number of candidates for an SRL is 3 x NCR. When multiple biometric types are searched, a maximum of NIR images are returned for each type. Therefore, the maximum number of images for an SRL is 3 x NIR. Multiple candidates in traditional encoding will be separated by the {RS} separator.

A candidate is defined as an event characterized by a unique combination of Subject Identifier (SI), Biometric Set Identifier (BSI), and FGP. Based on match score, there may be multiple instances of the same SI and FGP within a candidate list, but only the highest scoring SI/BSI/FGP combination for a subject will return an image, limited by the requested NIR value. Other, lower scoring BSIs for a given SI-FGP combination that appear within the list will not include images, and will be ordered by match score, not grouped by SI. The number of candidates returned (NCR) may be less than the maximum specified, as a result of thresholds determined by trade study tests and the algorithm used to determine potential matches. Also, depending on the number of unique SI and FGP candidates (up to NCR), it is possible that fewer images than the NIR requested may be returned per candidate list biometric type. The NDR field may contain a comma-separated list of repositories which contain the candidate. The CNL field supports a repeating set of the following information items:

A. SI (Subject Identifier) of the candidate (known or unsolved),
B. NAM indicates the name of the subject,
C. BSI of the candidate image,
D. IMT of the candidate image,
E. FGP of finger or palm,
F. PPD of the supplemental image when FGP equals supplemental (19),
G. MSC indicates the match score of the candidate,
H. BIA indicates the available biometric image types for the candidate,
I. NDR(s) the candidate resides in,
J. IDC is the Information Designation Character,
K. NOT provides owning ORI information when no image is available for candidate,
L. POS provides Pose codes for facial images,
M. SMT provides SMT codes for SMT images.

CRI 2.073 Controlling Agency Identifier

In Criminal and Civil transactions, the first instance of this field (CRI1) shall contain the Originating Agency Identifier (ORI) of the organization controlling the transaction. The CRI may be different from the submitting agency's ORI (e.g., the CSA), which shall be placed in the ORI field. When the controlling agency is also the submitting agency, both the ORI and CRI fields shall be submitted with the same identifier. (See Appendix B for definition of ORI.)

In criminal transactions, the CRI will usually refer to the booking station that has submitted the subject's fingerprints to be transmitted through the CSA to the FBI. The FBI uses the first instance of CRI (CRI1) in any transaction that would modify criminal records as the authority to do so.

When a Civil transaction matches a criminal record and the CRI1 is not authorized to receive the data, the ORI of the State Identification Bureau that submitted the transaction will be used instead. The second and third instances of CRI, when sent, are treated as user-defined fields.

CSL 2.051 Court Segment Literal

The CSL field is made up of the following information items:

A. The Court Disposition Date (CDD) is the date a court count was disposed of by the court. The CDD shall appear as specified in Section 1.1 of this appendix. This date field shall contain the local date for the region submitting the request, which shall not exceed the current date except when the submission originates from an international contributor located in a time zone ahead of the Eastern Time Zone.
B. The Court Offense Literal (COL) contains free-text description of an offense charged in a court count. The first character of the COL must not be a space.
C. The Other Court Sentence Provision Literal (CPL) contains free-text information on sentence provisions.
D. The Court Disposition (CDN) is a code from the following table, representing the definitive disposition information about a Subject for a particular charge. This element must contain a value most closely associated with the disposition type from the table below, provided in priority of use order.
E. The Court Count Number (CCT) is a two or three digit sequential number assigned to each court count. The valid values are 01 to 99 and 100 to 999.

Table 12 CDN Values Table

Court Disposition	Description
CONVICTED	Judicial finding of guilty of a crime in adult court, by verdict or plea
ACQUITTED	Finding, by jury or judge, that a person is not guilty of the charged offense
DISMISSED	Decision by the court that terminates prosecution; limited to court actions only, including Vacated, and Stricken on Leave, and Set Aside
CHARGES DROPPED	Use for arrest disposition only
NOT PROSECUTED	Use for events that end at the arrest, grand jury or prosecution phase – Nolle Prosequi, No Bill, Not Filed, No Action Taken

Court Disposition	Description
MENTAL HEALTH ADJUDICATION	Court action to suspend prosecution while determining competence to stand trial or a finding of not guilty by lack of mental responsibility. Meets qualifying criteria for mental defective. Includes Acquittal or Dismissal by Reason of Insanity.
DIVERSION	Referral to a program intended to enable alleged offenders to avoid criminal charges and a criminal record. Diversion programs may be run by law enforcement agencies, courts, prosecutors, or outside agencies. An offender may be referred to a diversion program before charges are brought, before trial commences, or before sentence is imposed. Includes Pre-Trial, Adult, Juvenile diversion and Probation before Judgment.
CONDITIONAL	Court outcome involving the absence of determination of guilt. If the type is based on conditions set by the court, the outcome may change if the conditions are satisfied. Includes Adjudication Withheld, Conditional Discharge, Non-Adjudication of Guilt, and Retirement.
JUVENILE ADJUDICATION	Court adjudication of delinquency or imposition of juvenile sanctions in adult court; not limited to felonies. This would be a conviction if the subject was treated as an adult. Includes Juvenile Delinquency and Youthful Offender.
REVOCATION	An annulment, cancellation or reversal of a finding of guilty
EXTRADITED	The official surrender of an alleged criminal by one jurisdiction to another; the return of a fugitive from justice, regardless of consent, by the authorities where the fugitive resides. Use for arrest dispositions only.
TRANSFERRED	The removal of a case from the jurisdiction of one court or judge to another. Includes Remanded (case sent back to court for further action)
DEPORTED	The expulsion or transfer of an alien from the country. Use for arrest dispositions only.
DECEASED	Subject charged is deceased.
CONSOLIDATED	Court ordered unification of two or more charges or cases into a single matter.
BAIL/BOND FORFEITURE	Money or property lost or confiscated by this process; a penalty. This may be a disposition in older, legacy records.
DEFERRED	Postponed or delayed, could relate to prosecution, sentence, judgment or disposition.
UNAVAILABLE	This will be entered by the state repository if the final disposition is unavailable. This code may be used when, upon thorough research, the disposition could not be found or was purged in accordance to record retention schedules.
DESTROYED	This will be entered by the state repository if the disposition could not be found due to destruction through a fire or a natural disaster.
OTHER	If using “OTHER” it is mandatory to provide detail or description under the COL information item.

Up to 999 occurrences of the CSL are allowed. Each occurrence in the traditional encoding of the CSL shall be separated by the {RS} separator character. Of the five available subfields, COL, CPL, and CDN are always mandatory, while the CDD and CCT are conditional (being required with TOTs FDSP and DSPE). A CDD (if available), followed by a COL, followed by a CPL, followed by a CDN, followed by CCT (if available), each separated by a {US} separator character must be present for each occurrence of the CSL field. If the CDD or CCT is not available, a {US} separator character alone shall be used.

When submitting a custody tenprint, use this field for custody information. In the event that there is no arrest information available when submitting a custody tenprint, the COL and CDD must be copied to the corresponding AOL and DOO fields of the Arrest Segment Literal (ASL), which is mandatory in all criminal tenprint submissions.

The following is a traditional encoding example of the CSL with multiple occurrences:

2.051:19940930{US}DUI{US}5 DAYS JAIL, PAY COURT COSTS{US} CONVICTED{US}01{RS}19940930{US}POSSESSION OF FIREARMS{US}10 DAYS JAIL, PAY COURT COSTS, $50{US}CONVICTED{US}02{GS}

The following is a traditional encoding example of the CSL when the first of two CDDs are not available:

2.051:{US}DUI{US}5 DAYS JAIL, PAY COURT COSTS{US} CONVICTED{US}01{RS}19940930{US}POSSESSION OF FIREARMS{US}5 DAYS JAIL{US} DIVERSION{US}02{GS}

CST 2.061 Case Title

This field identifies the Latent Case. It will include information concerning the case, and it must include the offense type.

CTZ 2.021 Country of Citizenship

This field contains two-letter abbreviation for the name of the country of which the subject is a citizen. Entry must be a valid country code from Appendix O.

DNAC 2.2018 DNA in CODIS Flag

This field indicates whether the DNA available is located in the CODIS database for the subject identified on the CAR, CNA, and CPNU TOTs. The permissible values are ‘Y’ or ‘N’.

DNAF 2.2016 DNA Flag *(Future Capability)*

This is a one-byte field that will indicate whether DNA is available for the subject identified on the CAR, CNA, and CPNU TOTs. The permissible values are ‘Y’ or ‘N’.

DOA 2.045 Date of Arrest

This date field shall contain the local date of arrest for the region submitting the request. The date shall appear as specified in Section 1.1 of this appendix. DOA shall not exceed the date of submission.

DOB 2.022 Date of Birth

This field contains the date of birth. It is entered as specified in Section 1.1 of this appendix. Unknown DOBs are not allowed, however, partial DOBs will be accepted. DOB shall not exceed date of submission after time zone adjustment.

DORI 2.2017 DNA Location *(Future Capability)*

This is an alphanumeric field that will contain the ORI of the contributor which has the DNA available for the subject identified on the CAR, CNA, and CPNU TOTs. The field will be required when the DNAF = 'Y'.

DOS 2.046 Date of Arrest - Suffix

This field contains a code representing the sequence of the subject's fingerprint submissions within a given date. The code also indicates the type of fingerprint submission on which either the Date of Arrest (DOA) or Date Print Received (DPR) was contained. This field is generally for internal use within the FBI; however, authorized external contributors may use DOS codes for Date Fingerprinted, Date Print Received, Date of Offense, and Date of Application. In some instances, this field may be blank.

DPR 2.038 Date Printed

This field contains the date that the subject's biometric(s) were captured. The format shall be the same as that specified in Section 1.1 of this appendix. This date field shall contain the local date for the region submitting the request. DPR shall not exceed the date of submission.

DTR 2.2068 Date Range

Used in the Rap Back Subscription List Request (RBRPT) transaction as an input parameter to limit responses to subscriptions expiring within the identified range.

EAD 2.039 Employer and Address

The name and address of the subject's primary employer may be entered into this free-text field. The EAD returned in a response is the same as the one submitted.

ERS 2.075 Electronic Rap Sheet

This field shall contain the electronic Identity History Summary (IdHS) of an identified subject. In the case of a non-identification, the IdHS will consist of the Non-Identification Response (NIDR). For a TPRR transaction that contains multiple candidates, the IdHS for each candidate will be concatenated into this field.

ESI 2.2037 External Subject Identifier

A subject identifier from an external system that represents a distinct identity.

EVI 2.2035 Event Identifier

This numeric field will be used to identify a specific biometric enrollment event for an identity. A single EVI may encompass multiple BSIs, if more than one biometric set is enrolled for the event.

EXP 2.080 Response Explanation

This field is free-form text to elaborate on the Response Code field.

EYE 2.031 Eye Color

For this field, the three letter code from the following table is used to indicate the subject's color of eyes.

Table 13 EYE Values Table

Eye Color	Code
Black	BLK
Blue	BLU
Brown	BRO
Gray	GRY
Green	GRN
Hazel	HAZ
Maroon	MAR
Multicolored	MUL
Pink	PNK
Unknown	XXX

FBI 2.014 FBI Number/UCN

This field is used to uniquely specify Identities contained in the NGI database, and shall be no more than nine alphanumeric characters. This Universal Control Number (UCN) is used to identify records in the criminal, civil, ULF and other repositories. The UCN number returned in a response is dependent upon the search results. The Legacy Subject Control Number (SCNA) used for ULF records may be provided in this field where designated in the message definition. The UCN field may also contain "BDEC", when it is on an investigative search result.

FFN 2.003 FBI File Number

This is a 10 byte numeric representing the FBI Investigative File Number. This is not the FBI Number specified by the mnemonic "FBI." Since it is used for FBI Latent Print Unit record-keeping purposes, it is imperative that the user transmit this number if it is known.

FGP 2.074 Friction Ridge Generalized Position

This field is used for latent searches and contains the fingerprint/supplemental/palm print position(s) code of the latent print(s) submitted for searching. (See Appendix P, Table P-2 for code values for FGP)

If more than one latent fingerprint image is submitted, then the position code of each fingerprint

image is mandatory, and the codes shall be separated by the {RS} character separator. If the latent image is from a finger for which finger position is unknown, the position code will be zero or may contain multiple guesses at the correct finger position. In this case, the PAT field must contain "00" in its Finger Number subfield to indicate that the actual position is unknown (see also PAT entry). If the submitter cannot determine what portion of the hand the latent image was derived from, then the position code should be omitted or "18" to spawn a search of all friction ridge areas (fingerprints, palm prints, supplemental prints) within the FBI/CJIS repository.

FIU 2.072 Fingerprint Image(s) Updated

This field contains the finger positions that were updated in the FBI's Fingerprint Image Master File as a result of an electronic request to update fingerprint images. The finger numbers for which image information is requested are selected from Table, "Finger Position Code," in the ANSI/NIST-ITL. Up to 13 individual finger numbers may be listed. For encoding, each finger number will be separated from one another by the {RS} separator. If images of all 14 fingers were updated, the single character "A" is shown instead of individual finger numbers. If no images were updated, an 'N' will be returned.

FNR 2.057 Finger Number(s) Requested

This numeric field is used in transactions involving a request for fingerprint image information. The finger numbers for which image information is requested are selected from Table, "Finger Position Code," in the ANSI/NIST-ITL. Up to 13 individual finger image numbers may be listed. For traditional encoding, finger numbers shall be separated from one another by the {RS} separator. If all 14 tenprint images are desired, 00 is shown instead of individual finger numbers. For transactions that allow only the ten rolled fingerprint images, when all ten images are desired, list each one separately. For traditional encoding, the finger codes being requested shall appear as 01{RS} 02{RS} ... {RS}10{GS}. This field may also include the supplemental position code of 19 and/or the palm position codes outlined in Table P-2.

FPC 2.033 NCIC Fingerprint Classification

If available, the NCIC fingerprint classification will be returned in the FBI's responses to latent submissions. The traditional encoding of NCIC FPC is composed of 20 characters. Patterns are placed in the positions representing each finger (see FPC Values Table).

The NCIC FPC for a set of fingerprints made up of all ulnar loops in traditional encoding might read:

2.033:12101116141109111713{GS}

A combination of loops and whorls with an amputated right index finger in encoding might read:

2.033:12XX11CO14115906Cl13{GS}

Table 14 FPC Values Table

Positions	Finger
1 and 2	Right Thumb
3 and 4	Right Index
5 and 6	Right Middle
7 and 8	Right Ring
9 and 10	Right Little
11 and 12	Left Thumb
13 and 14	Left Index
15 and 16	Left Middle
17 and 18	Left Ring
19 and 20	Left Little

Pattern Type	Pattern Subgroup	NCIC FPC Code
Arch	Plain Arch	AA
	Tented Arch	TT
Loop	Radial Loop	Two numeric characters. Determine actual ridge count and add fifty (50). For example, if the ridge count of a radial loop is 16, add 50 to 16 for a sum of 66. Enter this sum (66) in the appropriate finger position of the FPC field.
Loop	Ulnar Loop	Two numeric characters indicating actual ridge count (less than 50). For example, a ridge count of 14, enter as 14; a ridge count of 9, enter as 09.
Whorl*	Plain Whorl	
	Inner	PI
	Meeting	PM
	Outer	PO
	Central Pocket Loop Whorl	
	Inner	CI
	Meeting	CM
	Outer	CO
	Double Loop Whorl	
	Inner	DI
	Meeting	DM
	Outer	DO
	Accidental Whorl	
	Inner	XI
	Meeting	XM
	Outer	XO
Missing Amputated Finger**		XX
Scarred/Mutilated Pattern ***		SR
Approximate Fingerprint Class****		AC
Unclassifiable ****		UC

* Prior to adoption of the above method for coding whorl patterns, this pattern was divided into inner, meeting, and outer subgroups only with codes II, MM, and OO, respectively. Some older records in the file may show the codes II, MM, and OO.

** Code XX is used in instances of missing and totally/partly amputated fingers where conditions make it impossible to accurately classify an impression according to the above instructions for NCIC FPC. It is recognized that under the Henry System, if a finger is missing or amputated, it is given a classification identical to the opposite finger; however, this must not be done in the NCIC FPC because the location of finger or fingers missing/amputated is not indicated.

*** Code SR is used in instances in which the fingerprint cannot be accurately classified because of complete scarring or mutilation and a classifiable print cannot be obtained. As in the case of missing and amputated fingers, the procedure for assigning the classification of the opposite finger, as is done under the Henry System, should not be used for the NCIC FPC.

**** Codes UC and AC still exist for some legacy records in the Identity History file.

GEO 2.044 Geographic Area of Search

This field indicates the geographic area to be searched. The appropriate two letter state/territory abbreviation shall be used as listed in Appendix O. Each GEO entry shall be separated from the next by the {RS} separator character. Up to five state/territory selections can be made within the GEO field. If inclusion of all states and territories is desired, this field shall be omitted. When designating a specific state/territory within the GEO field, the search scope is limited to images previously submitted by the specified state or territory (i.e., individuals previously arrested in the designated location(s)). The GEO selection allows users to further narrow file penetration and may result in candidates being returned which would ordinarily be dropped due to low scores. Users are always encouraged to perform a second search with GEO omitted, if a GEO filtered search is not successful.

HAI 2.032 Hair Color

In this field, the three letter code is used to indicate the subject's color of hair.

Table 15 HAI Values Table

Hair Color	Code
Bald	BAL
Black	BLK
Blond or Strawberry	BLN
Blue	BLU
Brown	BRO
Gray or Partially Gray	GRY
Green	GRN
Orange	ONG
Pink	PNK
Purple	PLE
Red or Auburn	RED
Sandy	SDY
Unknown	XXX
White	WHI

HGT 2.027 Height

This field contains the subject's height as a three character value. If reported in feet and inches, the first (leftmost) digit is used to show feet while the two rightmost digits are used to show the inches between 00 and 11. If reported in inches, then the leftmost character is 'N' followed by two digits. If height is unknown, 000 is entered. The allowable range is 400 to 711 or N48 to N95. Heights outside this range will default to these limits.

HNOTI 2.2051 Hit Notification Indicator

This field shall contain a 'Y' to indicate that a record should be marked for hit notification. A value of 'N' will indicate that a potential match against the associated record should not generate a UHN. The default value when omitted is 'Y'.

HTI 2.2024 Hit Type Indicator

This field will contain a code for the type of hit that generated an unsolicited notification. This field is used for UHN Notifications.

Table 16 HTI Values Table

Code	Hit Type
RISC	Result of activity on a RISC Identity
FSI	Result of activity on an FSI Identity
SUPV REL	Result of activity on a Supervised Release Subject

HTR 2.028 Height Range

This field will be used to give an estimated height range to be expressed as two three-character values formatted as described for mnemonic HGT, indicating the shortest and tallest heights of the subject. For the traditional encoding of this field, the first three characters shall represent the minimum height and the second three the maximum height. There shall be no separator character used between the heights. The allowable range is 400 to 711 or N48 to N95. Heights outside this range will default to these limits.

ICO 2.056 Identification Comments

Additional miscellaneous identification remarks providing the reason for caution may be entered in this free-text field. The first character may not be a space.

IFS 2.2021 Identification Firearms Sales

This field indicates a prohibitor that may prevent the subject from the purchase of a firearm.

Table 17 IFS Values Table

Code	Description
D	Disqualification for Firearms
X	Unknown

IMA 2.067 Image Capture Equipment

This free-text field is used to log the make, model, and serial number of the equipment used to acquire images. It is composed of three information items:

A. Make (MAK)
B. Model (MODL)
C. Serial Number (SERNO) of the acquisition device

For traditional encoding, these information items shall be separated by the {US} separator character.

IMT 2.062 Image Type

This field identifies the type of image (e.g., palm prints) included in an electronic submission and response. The field definition has been modified to allow multiple occurrences in one transaction. The following table is a list of IMT values to be used to identify the records present or biometric sets being referenced in the submission or response. Note that the value of 2 is deprecated in favor of the new value of 6, and the values 4 and 5 are deprecated in favor of the new value of 7.

Table 18 IMT Values Table

Image Type	Value
Fingerprint (Event)	1
Palm Print	3
Supplemental Print	6
Latent Friction Ridge	7
Composite Fingerprint	8
Photo Facial	9
Photo Scar, Mark, & Tattoo	10
Iris (Future)	11
Fingerprints on Front of Palm Card (Future)	12
Fingerprints on Back of Palm Card (Future)	13
Unknown Facial Photo (UFP)	14

LCN 2.012 FBI Latent Case Number

This field is an 11 byte alphanumeric/special assigned by the FBI LPS. As this field is for FBI LPS internal use only, this response field will be used for record-keeping purposes only.

LCX 2.013 Latent Case Number Extension

Defines extensions assigned by the FBI for each submission related to a Latent Case Number. The LCX shall be a five-digit extension starting with “00000” for the first submission and incrementing by one for each subsequent submission. The LCX shall be used only in conjunction with LCN. As this field is for FBI LPS internal use only, this response field will be used for record-keeping purposes only.

LEN 2.001 Logical Record Length

This field contains the length of the logical record specifying the total number of bytes, including every character of every field contained in the record. The number of characters added to the record by the LEN field itself shall be included in calculating the value of LEN.

MAI 2.2052 Maintenance Action Indicator

A code to indicate what maintenance operation is being requested in a maintenance type of transaction. The XMNT TOT may use “REPLACE” or “DELETE”. The SPMNT TOT may use “ADD”, “DELETE” or “REPLACE”. The DSPE TOT may use any of the MAI codes.

Table 19 MAI Values Table

MAI Code Values	Maintenance Operations
REPLACE	Replace existing data with supplied information
DELETE	Delete existing data for referenced record
ADD	Add supplied information to existing data
APPEND	Append supplied information to existing data for referenced record

MIL 2.042 Military Code

A one letter code from the Military Code Table shall be entered in this field to indicate which branch of the United States Military submitted the enlistment transaction.

Table 20 MIL Values Table

Military Branch	Code
Army	A
Air Force	F
Navy	N
Marines	M
Coast Guard	G

MNU 2.017 Miscellaneous Identification Number

The subject’s miscellaneous identification numbers shall be entered in this field.

For traditional encoding, the format of the data shall be a two letter identifying code, followed by a hyphen (-), followed by the number itself. The size of the MNU is limited to 15 characters and as many as four miscellaneous numbers may be included in this field. Each MNU shall be separated from the next by the {RS} separator character.

The MNU Code table lists the acceptable two letter identifying codes. If “AF” or “AS” is entered, all characters following the hyphen must be numeric. Interspersed spaces are invalid. Types of numbers not listed in the table (such as driver’s license) shall not be entered. Only U.S. passport numbers shall be entered; foreign numbers shall be ignored.

Table 21 MNU Values Table

Identifying Agency	Code
Air Force Serial Number	AF
Non-Immigrant Admission Number	AN
Alien Registration Number	AR
Air National Guard Serial Number, Army Serial Number, National Guard Serial Number	AS
Bureau Fugitive Index Number	BF
Canadian Social Insurance Number	CI
U. S. Coast Guard Serial Number	CG
Fingerprint Identification Number (DHS only)	FN
Identification Order Number	IO
Marine Corps Serial Number	MC
Mariner's Document or Identification Number	MD
RCMP Identification or Fingerprint Section Number	MP
National Agency Case Number	NA
Navy Serial Number	NS
Originating Agency Police or Identification Number	OA
Personal Identification Number (State Issued Only)	PI
Passport Number (U.S. Only)	PP
Port Security Card Number	PS
Selective Service Number	SS
Veterans Administration Claim Number	VA

MSC 2.089 Match Score

This field contains the match score from NGI for each candidate listed in the 2.064 CAN field.

MSG 2.060 Status/Error Message

This free-text field will contain reason, status, or error messages that are generated as a result of the processing of a transaction and will be sent back to the submitter. For example, an Unsolicited Unsolved Latent Delete transaction will contain the reason for the deletion of a record. For traditional encoding, each message will be separated by the {RS} separator character.

NAM 2.018 Name

This alphabetic and special character field contains the name(s) of the subject. The traditional encoding format shall be the surname followed by a comma, followed by the given names, which are separated by a space. Personal Descriptors within the NCIC Code Manual describes in greater detail the manner in which each name is to be entered. Hyphens, commas, and spaces are allowed as special characters. Numerals are not allowed. Special values of NAM to be entered in cases where the subject's name is not known are:

Table 22 NAM Values Table

Condition Name	Field Name
Amnesia Victim	"UNKNOWN AMNESIA,XX"
Unknown Deceased	"UNKNOWN DECEASED,XX"
Name Not Available (Other)	"DOE,JOHN" or "DOE,JANE"

NCR 2.079 Number of Candidates Returned

This optional field contains the number of candidates the submitter desires to receive in response to a biometric investigative search request per ranked candidate list, with a maximum of 99. If multiple candidate lists are to be returned in a search request, the NCR value applies to each. If the NIR in the request is greater than NCR in the request, CJIS will set NIR to the NCR value. This field is also found in the responses to a biometric investigative search where it reflects the actual total number of candidates returned in the CNL field for the entire concatenated list. For EQRR, this field identifies the number of Identity History Summary reports that are returned in response to an EQHR.

NDR 2.098 Name of Designated Repository

This field contains the numerical designation of the repository to be searched. Repository numbers are assigned by the CJIS Division. Multiple entries in this field will indicate a desire to search more than one repository, including Canada's RTID and authorized DHS records. Multiple entries in traditional encoding will be separated by the {RS} separator.

Table 23 NDR Values Table

NDR Value	File Name
1	Criminal Master File Records
2	Civil Records
3	Unsolved Biometric File
4	Reserved for FBI use
5	Reserved for FBI use
6	Repository for Individuals of Special Concern (RISC)
7	Canada Real Time Identification (RTID)
8	DoD Automated Biometric Identification System (ABIS)
9	DHS IDENT
10	DHS IDENT and LESC
11	RISC Wants and Warrants (W&W)
12	RISC Sexual Offender Registry (SOR)
13	RISC Known and Suspected Terrorist (KST)
14	RISC Foreign Subjects of Interest (FSI)
15	RISC Persons of Special Interest (Other)
16	Internal Use Only
17-19	Reserved for FBI Future Use
20 - 50	Reserved for Department of Defense
51 - 100	Reserved for FBI Future Use
101-199	FBI or Other Federal Organization Special Population Cognizant Files

NDR Value	File Name
200-399	Reserved for State/Local System
400-699	Reserved for External FBI Use
700-999	Reserved for FBI Future Use

NIR 2.2010 Number of Images Requested

This optional field contains the number of maximum candidate images the submitter desires to receive in response to a biometric investigative search request for a given candidate list. If multiple candidate lists are to be returned the NIR value applies to each. This field is also found in the responses to a biometric investigative search where it reflects the actual number of candidates with image returned in the CNL field for the entire concatenated list.

NOT 2.088 Note Field

This free-text field is used to provide additional information regarding electronic latent submissions. For latent search identification results feedback, the NOT field will be used to indicate the candidate from the SRL that matched the search image. For UHN transactions, the NOT field will contain case related information about the search transaction with the hit that generated the unsolicited notification.

OCA 2.009 Originating Agency Case Number

This field contains the one-to-twenty-character Originating Agency Case Identifier (OCA) assigned by the originating agency. This alphanumeric-special (ANS) field may contain any printable non-control 7-bit ASCII character with the exception of the period. The OCA must not begin with a space.

OCP 2.040 Occupation

This free-text field contains the subject's occupation. The OCP returned in a response is the same as the one submitted.

OFC 2.053 Offense Category

This field shall contain a "1" for a crime categorized as personal, a "2" for a crime categorized as property, and a "3" for a crime categorized as both.

PAT 2.034 Pattern Level Classifications

This grouped field contains pattern classification information about the latent finger(s) image. As such, this field shall only be included when one or more of finger positions 0-10 are being searched. The PAT field is composed of two items:

A. Finger Position (FGP)
B. Pattern Classification Code (PATCL)

PAT shall consist of two-character finger position code followed by the primary pattern type code as chosen from the following table. Up to two reference pattern classifications per finger are also allowed, thereby making the total number of pattern classes allowable per finger equal to three. For traditional encoding, if multiple pattern types are used for reference for the same finger, they shall be separated from each other by the {US} separator. Multiple fingers shall be separated by the {RS} separator. If submitting a Latent Fingerprint whose actual finger position is unknown, the PAT and FGP (2.074) fields are used in conjunction as follows to supply guesses for which finger position the latent print might be: place a "00" in the FGP subfield of PAT to indicate the actual position is unknown; place the actual pattern in the PATCL subfield; place one or more finger number guesses in the FGP field (2.074).

The following is a traditional encoding example of the Pattern Level Classification field with only one pattern per finger.

2.034:01{US}WU{RS}02{US}LS{RS}03{US}LS{RS}04{US}LS{RS}05{US}LS{RS}06{US}
RS{RS}07{US}RS{RS}08{US}LS{RS}09{US}RS{RS}10{US}RS{GS}

The following is a traditional encoding example of the Pattern Level Classification field with extra pattern references for some of the fingers.

2.034:01{US}RS{US}WU{US}AU{RS}02{US}RS{US}AU{US}WU{RS}03{US}WU{RS}04{US}
RS{RS}05{US}WU{RS}06{US}LS{RS}07{US}WU{RS}08{US}AU{RS}09{US}AU{RS}10{US}
WU{US}AU{GS}

Table 24 PAT Values Table

Two characters represent each finger as follows:

Finger Position	Code
Right Thumb	01
Right Index	02
Right Middle	03
Right Ring	04
Right Little	05
Left Thumb	06
Left Index	07
Left Middle	08
Left Ring	09
Left Thumb	10

The following is a list of acceptable CJIS pattern level fingerprint classifications.

Pattern	Code
Arch, Type Not Designated	AU
Whorl, Type Not Designated	WU
Right Slant Loop	RS
Left Slant Loop	LS
Complete Scar	SR
Amputation	XX
Unable to Print (e.g., bandaged)	UP
Unable to Classify	UC

PEN 2.078 Penetration Query Response

This field provides a response to the penetration query that includes a set of search parameters for a new search. The response will be an estimated size, in percentage, of the repositories that will be searched given the input parameters.

PHT 2.036 "Photo Available" Indicator

If a photograph of the subject is available, this field shall contain a 'Y'; otherwise, the field shall be omitted.

POB 2.020 Place of Birth

The subject's place of birth shall be entered in this field. Indicate in this POB field the state (Mexico or United States), territorial possession, province (Canada), or country of birth. The appropriate two letter abbreviation shall be used as listed in Appendix O. The criteria listed below shall also be considered when assigning POB.

Table 25 POB Values Table

If the following conditions exist	Enter Code
POB stated as state AND country and applicable code not contained in Code Table; OR city can be ascertained as not being located in the United States; OR foreign POB and applicable code not contained in Code Table	YY
POB stated as only city AND city can be ascertained as being located in the United States	US
POB is Mexico or any Mexican state or province not in Code Table	MM
POB is "Mexico, Mexico"	MX
POB is unknown	XX

POC 2.2072 Point of Contact

This grouped field contains contact information associated with a biometric/identity enrolled in the RISC or SPC file. It is composed of two information items:

A. Name (organization or person)
B. Phone Number

POS 2.2036 Subject Pose

Please refer to ANSI/NIST-ITL for the definition and values for field 10.020 POS.

PPA 2.035 "Palm Print Available" Indicator

If palm prints are available, this field shall contain a 'Y'; otherwise, the field shall be omitted.

PPD 2.2030 Print Position Descriptors

This field will be present if and only if the finger position code (19) appears in Field 2.074. This field will consist of two mandatory information items:

A. The probable integer finger position code (0-10) taken from finger position table.
B. The code taken from Table P-1, found in Appendix P, to indicate the portion of the EJI or tip image that is a part of the transaction.

PPD 2.2028E, 2.2032G, 2.2033F Print Position Descriptors

This PPD is an information item included within other fields. This item will be present if and only if the Friction ridge Generalized Position code (FGP) or the Friction ridge Number(s) Requested (FNR) code (19) appears in the field. These instances of PPD shall consist of a string containing two mandatory pieces of information. The first is the Probable Decimal finger Position code (0-10) taken from the ANSI/NIST-ITL specification. The finger position must include a leading zero for positions 0 through 9. The second information item is the Finger Image Code; it also is taken from the ANSI/NIST-ITL specification to indicate the portion of the EJI or tip image. Examples of valid values are: 01EJI or 10TIP.

RAC 2.025 Race

This field is used to indicate the race of the subject.

Table 26 RAC Values Table

If Subject Is	Enter Code
Chinese, Japanese, Filipino, Korean, Polynesian, Indian, Indonesian, Asian Indian, Samoan, or any other Pacific Islander	A
A person having origins in any of the black racial groups of Africa	B
American Indian, Eskimo, or Alaskan native, or a person having origins in any of the 48 contiguous states of the United States or Alaska who maintains cultural identification through tribal affiliation or community recognition	I
Of indeterminable race	U
Caucasian, Mexican, Puerto Rican, Cuban, Central or South American, or other Spanish culture or origin, Regardless of race	W

RAP 2.070 Request for Electronic Rap Sheet

The purpose of this field is to allow the contributor to optionally request an electronic Identity History Summary (IdHS) of the identity. An NIDR is returned if the submission results in a non-identification. A 'Y' in this field indicates that an IdHS is desired, while an omitted field or an 'N' in this field indicates that no IdHS should be returned with the response.

RAR 2.2047 Return All Records Indicator

This field is used to indicate that a search includes all Rap Back Subscriptions that are routed through the sending ORI. If omitted the default is 'N', where only subscriptions owned by the sending ORI are searched and returned.

RBATN 2.2070 Rap Back Attention Indicator

This field shall contain a Subscriber-designated individual or Section to whose attention any inquiry or notification on a Rap Back Subscription should be directed within the Subscribing Entity, and a 24/7 contact number. The RBATN is returned on some Identity History Summaries provided to criminal justice agencies for criminal justice purposes.

RBC 2.2065 Rap Back Category

Used to identify the correct category of the subscription so that NGI will use correct Purpose Code when generating criminal history information. Category is a required field that must have one of the following values. The resulting Purpose Codes are also listed:

Table 27 RBC Values Table

Rap Back Category	Code	Purpose Code
Volunteer, Child Care/School Employee, Non-Criminal Justice Employment and Licensing	I	I
Criminal Justice Employment	J	J
Criminal Justice Investigative	CI	C
Criminal Justice – Supervision	CS	C
Security Clearance Information Act	S	S

RBDI 2.2067 Rap Back Disclosure Indicator (Criminal Subscriptions Only)

This field is used for criminal justice subscriptions, to indicate whether the Rap Back Subscription should be visible on Rap Sheets generated to other criminal justice agencies. This field should contain a 'Y' to indicate that Criminal Rap Back Subscription information should be included as Identity History Summary information. The default is 'N'.

RBMI 2.2039 Rap Back Maintenance Indicator

This field is used in the Rap Back Maintenance Request (RBMNT) to indicate the type of maintenance action being requested as defined in the Rap Back Maintenance Request section of this document.

Table 28 RBMI Values Table

Code Value	Format Description
R	Replace Rap Back Subscription data on file with that provided in the request
D	Delete Rap Back subscription data provided in request that matches what is on file
A	Append Rap Back subscription data provided in request to that on file
C	Cancel the Rap Back subscription
N	Renew the Rap Back subscription (Currently not being used)
U	Un-cancel a cancelled Rap Back subscription

RBNF 2.2062 Rap Back Activity Notification Format

This field indicates whether the subscriber wishes Rap Back Activity Notification Format to be Pre-notification, Triggering Event, or Triggering Event with Identity History Summary. This field is mandatory in establishing a Rap Back Subscription. Subscribers must choose a value from the table below; there is no default value.

Table 29 RBNF Values Table

Code Value	Format Description
1	Pre-notification
2	Triggering Event
3	Triggering Event and Identity History Summary

RBNI 2.2041 Rap Back Activity Notification Indicator

This number is provided to the Subscriber within the Rap Back Activity Notification when a reported event matches against one of their Rap Back subscriptions in NGI. If the Subscriber indicated "Pre-Notification" or "Triggering Event" in the Rap Back Activity Notification Format field when setting the subscription, they will use the Rap Back Identity History Summary Request transaction to see the updated criminal history record information of the person. The Subscriber must use the RBNI in the RBIHS request.

RBOO 2.2063 Rap Back Opt Out In-State Indicator

This field is set by the Submitter, to indicate NGI should not send the Submitter notifications of Criminal Retain Submission events originating from within the Submitter's own state. The default value is 'N', NGI sending notifications of all Criminal Retain Submissions. A value of 'Y' must be provided on all subscriptions for which Submitter wishes to opt-out of in-state notifications of Criminal Retain Submissions.

RBR 2.2020 Rap Back Recipient

This field is used by the Subscriber to designate the ORIs of additional recipients of Rap Back Notifications under the authority of a Rap Back Subscription.

RBSD 2.2054 Rap Back Subscription Date

This field represents the Date that a Rap Back Subscription was created by NGI.

RBSI 2.2048 Rap Back Subscription Identifier

This field is a unique number assigned by NGI that identifies the subscription as a whole. It is provided back to the Rap Back Submitter/Subscriber when the subscription is established. This identifier is required to perform maintenance on an existing subscription.

RBSL 2.2050 Rap Back Subscription List

A comma-separated values (CSV) file is used to return Subscription Lists to Subscribers. See the EBTS description of Rap Back Subscription List Response (RBRPTR) for more information.

Please note that double quotes are used in two different ways within the CSV file:

1. To distinguish between a comma delimiter and a comma used within a field.
   For Example, the name John Doe would be represented in the CSV file as "Doe, John". If the double quotes were not used, then 'Doe' and 'John' would be considered two separate field values.

2. To distinguish between subfields (Triggers, User Defined Field Name, User Defined Field Content)

For example, there may be multiple triggers associated with one subscription, and all of those triggers would be 'listed' under the column heading of 'Trigger Event(s)'
A Carriage Return Line Feed (CRLF) is used to separate them. For example,
"Criminal Retain Submissions
Want Addition
Want Deletion"

RBST 2.2071 Rap Back Subscription Term (Civil Subscriptions Only)

This field is an optional field as there are currently no fees associated with Rap Back Services. If fees were to be reinstated this would then be used to indicate the Length of the Term of a Rap Back Subscription.

Table 30 RBST Values Table - Currently Not Used

RBT 2.2040 Rap Back Trigger

This field allows a Rap Back Subscription to specify which Events will cause future notifications to the Subscriber. All Subscriptions will have "Criminal Retain Submissions" as a triggering event. The Subscriber can choose additional triggers from the table below, if desired. The "Civil Retain Submission" trigger will only be allowed for those federal agencies authorized to receive those events.

Table 31 RBT Values Table

RBT Code Value	Format Description
1	Criminal Retain Submission
2	Dispositions
3	Civil Retain Submission
4	Expungement/Partial Expungement
5	Want Addition
6	Want Deletion
7	Want Modification
8	Sexual Offender Registry Addition
9	Sexual Offender Registry Deletion
10	Sexual Offender Registry Modification
11	External
12	Death Notices
13-40	Reserved for FBI Future Use

RBTD 2.2049 Rap Back Term Date

The Rap Back Subscription Term will not be used at this time, as there are currently no fees associated with Rap Back Services. The field remains available in case Rap Back fees are reinstated.

RBTED 2.2069 Rap Back Triggering Event Details

This set of data elements provides detailed information about the event that triggered the Rap Back Notification (RBN). This field consists of a set of three information items:

A. DORBE - Date of Rap Back Event
B. RBT - Rap Back Trigger
C. RBEI - Rap Back Event Information

RBUD 2.2064 Rap Back User Defined

Appropriate use is determined by the Submitter. Each User Defined field is actually a set of two fields:

A. Rap Back Field Name - a 50 character field in which the Subscriber can place a user-defined name for this field
B. Rap Back Field Text - a 100 character field in which the Subscriber places the user-defined text information.

The Rap Back Field Text can contain additional linking information for the subscription such as SID, TCN, or OCA; more detailed contact information; reminder notes regarding the subscription; or any other relevant information. These fields are not disseminated on an Identity History Summary, rather they are returned to the SIB or Federal Submitting Agency with the Rap Back Activity Notifications.

RBXD 2.2015 Rap Back Expiration Date

This field represents the Date a Rap Back Subscription expires under the Subscriber's Privacy Strategy. Prior to expiration, the Subscription Record will be included in a monthly expiration list for validation processing.

RCD1 2.091 Ridge Core Delta One for Subpattern Classification

This grouped field contains information about the finger(s) ridge counts and is used for Native Mode searches in conjunction with the Pattern Level Classification (PAT 2.034). It is composed of two information items:

A. Finger Position (FGP)
B. Ridge Count Number 1 (RCN1)

RCD2 2.092 Ridge Core Delta Two for Subpattern Classification

This grouped field contains information about the finger(s) ridge counts and is used for Native Mode searches in conjunction with the Pattern Level Classification (PAT 2.034). It is composed of two information items:

A. Finger Position (FGP)
B. Ridge Count Number 2 (RCN2)

For traditional encoding, the two-character finger position code as specified for the related Pattern Level Classification (PAT) is followed by the {US} separator and at least one RCN2. Each pattern classification PATCL specified in the tagged field 2.034 must be accompanied by two ridge count indicators, one in RCD1 and one in RCD2 as described in the following table. If multiple RCN2s are used for reference to the same finger, they shall be separated from each other by the {US} separator. Multiple fingers, if provided, shall be separated by the {RS} separator.

The Ridge Count Number (RCN1 and RCN2) represents the number of ridges between the core and the delta. For right and left slant loops, this count identifies the ridges crossed on a line between the core and the delta. For whorls, both the RCN1 and the RCN2 values have meaning. Permissible values are 1 to 30 for actual ridge counts and 30 if there are more than 30 ridges. The count of 31 indicates an unknown number of ridges, and 0 indicates that the ridge count is not applicable.

The following traditional encoding example shows the relationship between the Pattern Level Classification (2.034), Ridge Core Delta 1 (2.091) and Ridge Core Delta 2 (2.092) fields where only the primary classification for each finger is given. In this case, one PATCL, one RCN1, and one RCN2 are associated with each finger. Spaces are shown for clarity only.

2.034:01{US}WU{RS}02{US}LS{RS}03{US}AU{RS}04{US}XX ...{RS}10{US}WU{GS}
2.091:01{US} 9{RS}02{US}4{RS }03{US}0{RS}04{US}0 ... {RS}10{US}14{GS}
2.092:01{US}7{RS}02{US}0{RS}03{US}0{RS}04{US}0 ...{RS}10{US}21{GS}

The following example of the Pattern Classification (2.034) field includes two reference classifications for finger 01, only a primary classification for finger 07, and one reference classification for finger 09. Each PATCL in 2.034 requires a corresponding RCN1 and RCN2 in fields 2.091 and 2.092. Spaces are shown for clarity only.

2.034:01{US}RS{US}WU{US}AU{RS}07{US}XX{RS}09{US}AU{US}LS{GS}
2.091:01{US}9{US}9{US}0{RS}07{US}0{RS}09{US}0{US}8{GS}
2.092:01{US}0{US }11{US}0{RS}07{US}0{RS}09{US}0{US}0{GS}

Table 32 RCD Values Table

Pattern	Code	RCN1	RCN2
Arch, Type Not Designated	AU	0	0
Whorl, Type Not Designated	WU	1-31	1-31
Right Slant Loop	RS	1-31	0
Left Slant Loop	LS	1-31	0
Complete Scar	SR	0	0
Amputation	XX	0	0
Unable to print (e.g., bandaged)	UP	0	0
Unable to Classify	UC	0	0

REC 2.082 Response Code

This field will contain allowable values of 'Y' or "N." This field is used in the PDR and PRR transactions to indicate the status of the corresponding request. If the request contains any errors, the response code (REC) will be set to "N." Otherwise it will be set to "Y."

RES 2.041 Residence of Person Fingerprinted

This is a free-text field, including printable special characters and formatting characters (CR, LF, TAB) that is used for the residential address of the person fingerprinted. The RES returned in a response is the same as the one submitted.

RET 2.005 Retention Code

This field indicates whether the information submitted as a part of a transaction is to be retained as a permanent part of the FBI's Master File. Submit a 'Y' for yes or an 'N' for no.

RFP 2.037 Reason Fingerprinted

This field is used to indicate the purpose of a civil or applicant fingerprint card submission. Commas, spaces, dashes, hyphens, and slashes are all allowed as special characters. The submitting agency should indicate the specific statutory authority authorizing the fingerprint submission in this field.

Agencies may choose to use standard terms in this field related to the purpose of the fingerprint submission instead of the specific statutory authority. The standard reasons are:

- Firearms
- Volunteer
- Criminal Justice Employment
- Child Care/School Employee
- Other Employment and Licensing

Note: The use of RFP requires coordination with FBI prior to use.

RFR 2.095 Request Features Record

This one-character field is used to indicate a user's desire to have CJIS return a Type-9 features record associated with an image requested during an Image Request or Latent Investigative Search. For an Image Request, the features or template will be returned in extended feature set of the Type-9 returned. For the Latent Investigative Search, the features and matched minutiae will be returned to allow for an overlay on the image for comparison purposes. An extended feature set will be returned if the RFR value equals 'Y'. A features record will not be returned if the field is omitted (its use is optional) or if the value of RFR equals 'N'.

RPR 2.096 Request Photo Record

This one-character field is used to indicate a user's desire to have CJIS return a Type-10 photo record if one is on file and disseminable. Allowable values for this field are 'Y' and 'N'.

RSC 2.2102 Reason Supervision Cancelled

This 300 character free-text field is used by an agency requesting cancellation of a supervisory notification to indicate the reason a supervised release notification is being cancelled (e.g., supervision/parole/probation revoked, remanded to custody or prison, supervision completed, supervision cancelled, etc.). This field allows any 7-bit non-control character.

RSR 2.065 Repository Statistics Response

This field contains a file generated by the NGI Latent Friction Ridge system that provides detailed statistics that can be used to estimate the level of penetration of the repository given a set of search parameters defined in the search request. This field is in the form of a large ASCII file that can contain up to 96,000 bytes of alphanumeric-special (ANS) data. This field contains five items separated by tab characters:

A. Parameter name
B. Parameter Value
C. The fraction of the Criminal file having that value of the parameter
D. The fraction of the Civil file having that value of the parameter
E. The fraction of the combined Criminal and Civil files having the value of the parameter.

In the traditional encoding formatting, the fields are separated with "whitespace" (spaces and/or tabs) with MS DOS end-of-line convention (CR/LR). A period character is used as a decimal point in the fraction values. The value should be interpreted as the proportion of records matching that category and code. Data rows containing all zeroes will not be returned. See RSR Data Tables for

examples and allowed parameter names.

Table 33 RSR Response Example Values Table

Parameter	Value	Criminal	Civil	Combined
RACE	U	0.027	0.015	0.025
RACE	A	0.015	0.218	0.12
GENDER	X	0.001	0	0.001
GENDER	M	0.748	0.692	0.723
DOB	UNK	0.001	0.001	0.001
DOB	0	0	0.003	0.003
DOB	1	0.001	0.002	0.002
POB	AL	0.012	0.02	0.022
ARREST	TX	0.303	0.27	0.432
FINGER	0	0	0	0
FINGER	1	0.901	0.923	0.924
PALM	21	0.072	0	0.07
EJI	LEFT	0.081	0	0.08
EJI	DST01	0.038	0	0.035
ARCH	2	0.27	0.38	0.47
LEFTSLT	3	0.432	0.295	0.552
RIGHTSLT	4	0.47	0.501	0.59
WHORL	5	0.283	0.244	0.372

Table 34 RSR File Category Specification

Definition	Parameter	Parameter Size	Parameter Values
Race	RACE	5	U, A, B, I, W
Gender	GENDER	7	X, M, N, G, Y, F, Z
Year of Birth	DOB	101	UNK, or last two digits of year
Place of Birth	POB	422	EBTS defined in Appendix O
Place of Arrest	ARREST	422	EBTS defined in Appendix O
Finger Positions	FINGER	11	EBTS defined finger codes: 00-10
Hand Positions	PALM	17	EBTS defined palm codes 20-36
EJI Positions	EJI	30	EBTS defined joint image segments for each finger. PRX01, DST01, PRX02, MED02, DST02, etc. and LEFT/RIGHT when only full EJI is identified
Arch	ARCH	10	EBTS defined finger codes: 01-10
Left Slant Loop	LEFTSLT	10	EBTS defined finger codes: 01-10
Right Slant Loop	RIGHTSLT	10	EBTS defined finger codes: 01-10
Whorl	WHORL	10	EBTS defined finger codes: 01-10

SCNA 2.086 Subject Control Number

This field contains an identifier used to track or reference unsolved records. Legacy records that were deposited in the ULF prior to NGI Increment 3 will be referenced with their legacy SCNA. All other unsolved records will be referenced with a UCN in this field. The SCNA field is used, for example, to reference records in the ULF or UPF in the response to a latent or facial investigative

search respectively.

SCO 2.007 Send Copy To

The purpose of this 9-to-19-character alphanumeric-special (ANS) field is to indicate that additional electronic responses need to be forwarded to agencies other than the contributor by the State Identification Bureau. The first nine characters shall be alphanumeric and shall contain the ORI for an agency who is to receive a copy of the response. At the option of the transmitting agency, the ORI may be expanded to a size of 19 characters, with 10 characters of alphanumeric-special (ANS) data appended to the end to assist in proper routing of the responses. However, no {US} or {RS} separator may be used between the ORI and routing extension (use any printable non-control ASCII special character (e.g., a slash) as a separator). Upon receiving an electronic response, the State Identification Bureau will forward a copy of the electronic response to each agency listed in the "SEND COPY TO" block.

SDOB 2.2007 Submitted Date of Birth

A date of birth as provided in a submission.

SED 2.2100 Custody or Supervisory Status End Date

This field contains the end date for the subject's indicated custody or supervisory status. The date shall appear as an eight-digit number in the same format as specified in Section 1.1 of this appendix. The SED may not be less than the SSD and may not exceed 99 years from the record DOB.

SEX 2.024 Sex

This field is used to report the gender of the subject.

Table 35 SEX Values Table

If Following Condition Exists	Enter Code
Subject's gender reported as female	F
Occupation or charge indicated "Male Impersonator"	G
Subject's gender reported as male	M
Occupation or charge indicated "Female Impersonator" or transvestite	N
Male name, no gender given	Y
Female name, no gender given	Z
Unknown gender	X

SID 2.015 State Identification Number

This field contains any known state or territory identification number. The traditional encoding format is the standard two character abbreviation of the state name followed by the number. Embedded spaces are not permitted. SIDs from Oregon and Pennsylvania may contain a hyphen in

the last position. The SID returned in a response is dependent upon the search results.

SII 2.2023 Supplementary Identity Information

This field will contain identity information not within the scope of the standard NGI Identity History Summary. The format and content of the information in this field may vary for different transactions.

SLE 2.055 Custody or Supervisory Literal

This field contains the free-text description of the subject's custody or supervision status. The first character must not be a space. Entry of SLE requires that SSD and OCA also be entered.

SMD 2.2058 SMT Descriptors

This field is used to describe the content of the SMT image to an extent that is greater than documented in Field 2.026: NCIC SMT code / SMT. It shall consist of one or more sets of information items. An SMT image consisting of several parts or sub-images shall use occurrences to fully describe the various parts or features found in the total image. The first occurrence shall describe the most predominant feature or sub-image contained in the SMT image. Subsequent occurrences shall describe additional portions of the image that are not part of the main or central focal point of the image. For example, a tattoo consisting of a man with a snake on the arm being followed by a dog may consist of three occurrences: one describing the man, a second describing the snake, and a third describing the dog. SMD consists of the following information items:

A. SMI shall identify the type of SMT. SMI values are described in the SMI table below.
B. TAC shall be the general class code of tattoo chosen from the "Class Code" column of ANSI/NIST-ITL 1-2011 Table 67. This information item does not apply to scars and marks.
C. TSC shall be the appropriate subclass code selected from ANSI/NIST-ITL 1-2011 Table 67. For each general class of tattoo, there are several defined subclasses. This information item does not apply to scars and marks.
D. TDS shall be an optional text string that provides additional qualifiers to describe the image or portion of the image. This information item does not apply to scars and marks.

Table 36 SMI Values Table

Value	Description
SCAR	indicate healed scar tissue that was the result of accident or medical procedure
PIERCING	a deliberately made hole through body tissue, usually to wear body ornamentation
MARK	used for the pattern resulting from needle or track marks
TATTOO	for deliberately applied or drawn images (common tattoo) or indelible image resulting from the pricking of the skin with a coloring matter
CHEMICAL	the image was created by the use of chemicals to burn the image into the skin
BRANDED	the image was burned into the skin using a branding iron or other form of heat
CUT	the image was caused by incision of the skin*

*The value for this information item is selected from the "Image sub-code" column of ANSI/NIST-ITL 1-2011 Table 58.

SMS 2.2055 SMT Size or Size of Injury or Identifying Characteristic

This optional field shall contain the dimensions of the portion of image contained in this record (it may be the entire scar, mark, tattoo, injury or identifying characteristic). It shall consist of two information items: height / HGT and width / WID. Each dimension shall be entered to the nearest centimeter.

SMT 2.026, 2.2028G, 2.2032I, 2.2033M, 2.2061D Scars, Marks and Tattoos

For each scar, mark, or tattoo present on the subject, the appropriate NCIC code shall be used in this information item. Spaces are allowed as special characters.

SNAM 2.2008 Submitted Name

A name as provided in a submission that is formatted the same as other name fields (2.018 NAM).

SOC 2.016 Social Security Account Number

This field contains the subject's Social Security number if known. This number shall be entered as nine consecutive digits with no embedded punctuation characters. No foreign social security numbers shall be used.

SRA 2.2104 Supervised Release Action

A code from the following table is used by the contributor to indicate the type of action desired when submitting a Supervised Release Notification Request (SRNR). The minimum length and maximum length 3 bytes. The SRA and the CRI are both mandatory when the SRNR TOT is used. For supervision transfers, the Transfer Agency Supervision (TAS) code is used with the Supervision Transferred to (STT) field to identify the new supervision agency.

Table 37 SRA Values Table

If the following condition exists:	Enter Code
Establish Agency Supervision	EAS
Cancel Agency Supervision	CAS
Transfer Agency Supervision	TAS

SRF 2.059 Search Results Findings

This field is used in responses to submissions and contains a single character indicating the results of a comparison. The following table outlines the valid values, their meanings, and transactions which may contain those values. SRF values that are specific to a single request TOT reflect the request and response TOTs with a dash between them (e.g., FDSP-SRE), where only the response TOT contains the SRF field.

Table 38 SRF Values Tables

Value	Definition	TOT
C	Inconclusive	BDEC, LSR
D	Deferred for manual processing	FDSP-SRE
G	Green - No Hit	RPISR
I	Identification	BDEC, LSR, SRE
M	Match of Images Submitted	FVR-SRE
N	Non-Identification	BDEC, LSR, SRE
P	Pending Verification of Identification	BDEC, LSR
R	Red - Hit on Potential Candidate, High Confidence Match	RPISR, UHN
Y	Yellow - Probable Candidate, Potential Match	RPISR, UHN, BDEC
X	Not a Match of Images Submitted	FVR-SRE
Z	Disposition posted but no biometric search was performed.	FDSP-SRE

SSD 2.054 Custody or Supervisory Status Start Date

This field contains the start date for the subject's custody or supervisory status. The date shall appear as specified in Section 1.1 of this appendix. This date field shall contain the local date for the region submitting the request. The SSD may not be less than DOA. The SSD shall not exceed the current date.

SST 2.2101 Supervised Status Type

This field contains a three byte code that indicates the type of supervised release. If necessary, multiple types may be used for a supervised release notification.

Table 39 SST Values Table

If Following Conditions Exist	Enter Code
Bail Supervision	BLS
Conditional Release	CDR
Mandatory Release	MAN
Parole	PAR
Probation	PRO
Pretrial Diversion	PTD
Special Parole Term	SPT
Supervised Release	SUR

STT 2.2103 Supervision Transferred To

The purpose of this field is to indicate that a Supervisory Agency who has an active supervised notification request attached to the Identity History wishes to transfer supervision of the offender to another supervisory agency. The characters shall be alphanumeric and shall contain the Originating Agency Identifier (ORI) for the agency who will become responsible for the offender's supervision. This field is mandatory when the SRA type is Transfer Agency Supervision (TAS).

TAA 2.087 Treat as Adult

A one-byte optional field to indicate whether a juvenile is to be processed as an adult. A 'Y' indicates yes; an omitted field indicates no. The TAA returned in a response is the same as the one submitted.

TCL 2.2059 Tattoo Color

This field may contain multiple occurrences, each corresponding to an occurrence contained in Field 2.2058: SMT descriptors / SMD. Each occurrence shall contain up to 6 information items that list the color of the tattoo or part of the tattoo. For each occurrence, the first information item shall be the predominant color of the tattoo, chosen from ANSI/NIST-ITL 1-2011 Table 68. Additional colors may be entered as optional subsequent information items of the form tattoo color code n / TCn (n=2 through 6). There need not be more than one information item.

TLI 2.2046 Tier Level Indicator

A one-byte field to indicate what level of dissemination is appropriate for a retained RISC or RISC Special Interest enrollment. The values should be chosen from the table below. The default value is '1' when this field is omitted.

Table 40 TLI Values Table

Definition	Code
Share ALL	1
Share POC (ATN) Information Only	2
Silent Hit	3

TSR 2.043 Type of Search Requested

A one byte code shall be entered in this field from the following table to indicate the type of record being submitted. The field is applicable to the NFUF, CPDR, FNDR, NNDR, CPNU, DOCE, EMUF, and NFUE transactions.

Table 41 TSR Values Table

Type of Record	Code	Applicable TOT
Confidential Screening	C	CPDR, FNDR, NNDR
Suppress/Modify Unsolicited Want/SOR Notification (Non-Urgent Criminal)	H	CPNU**
Pre-commission candidate record with fingerprints	P	NFUF, DOCE, EMUF, NFUE
Civil submission in support of the National Child Protection Act of 1993	V	NFUF*, NFUE*

* When submitting fingerprints using a TSR of V, the contributing agency should specify either the VCA/NCPA or a state statute in the RFP field. To be charged at the volunteer rate, the word "volunteer" must appear with or without the statute.

**For Internal FBI use only.

ULF 2.083 Unsolved Biometric File

This field is used to designate whether a latent image, features record, or unsolved facial photo in a search should be added to the respective unsolved biometric file . Submit a 'Y' for yes. If negative, submit 'N'. If the field is omitted, the default behavior will be 'N'.

ULR 2.2034 Unsolved Latent Retained

This field is used in a Biometric Decision Submission (BDEC) when the decision is a positive identification and the user requests that the unsolved record be retained in the unsolved file. A value of 'Y' indicates that the latent record should be retained in the ULF. No value or a value of 'N' indicates that the user does not want the unsolved record retained.

WGT 2.029 Weight

In this field, the subject's weight in pounds is entered. If weight is unknown, 000 is entered. All weights in excess of 499 pounds will be set to 499 lbs. WGT must be in the range 050 to 499 lbs. (however, there is no minimum range limit for missing persons or unknown persons).

WTR 2.030 Weight Range

If a range of weight is given, it shall be expressed as two three digit numbers indicating the minimum and maximum weights (in pounds) of the subject. There shall be no separator character used between the weights. WTR must be in the range 050 to 499 lbs. (however, there is no minimum range limit for missing persons or unknown persons).

Table C-1 Field Edit Specifications for Type-2 Elements

Field Number	Identifier	Field Name	Character	Field Size (not including Character Separators) Min	Field Size (not including Character Separators) Max	Occurrences Min[1]	Occurrences Max	Example	Comments/Special Characters
2.001	LEN	LOGICAL RECORD LENGTH	N	2	7		1	2.001:909{GS}	
2.002	IDC	INFORMATION DESIGNATION CHARACTER	N	1	2		1	2.002:00{GS}	
2.003	FFN	FBI FILE NUMBER	N	10	10		1	2.003:2537597861{GS}	
2.005	RET	RETENTION CODE	A	1	1		1	2.005:Y{GS}	
2.006	ATN	ATTENTION INDICATOR	ANS	3	30		1	2.006:SA J Q DOE,RM 11867{GS}	Any printable 7-bit ASCII character with the exception of the period is allowed.
2.007	SCO	SEND COPY TO	ANS	9	19		9	2.007:NY030025P{GS}	
2.009	OCA	ORIGINATING AGENCY CASE NUMBER	ANS	1	20		1	2.009:Q880312465{GS}	Any printable 7-bit ASCII character with the exception of the period is allowed
2.010	CIN	CONTRIBUTOR CASE IDENTIFIER NUMBER	SET				5	2.010:INCIDENT NUMBER{US}1963BRT715{GS}	Any printable 7-bit ASCII character is allowed.
A	CIN_PRE	CONTRIBUTOR CASE PREFIX	ANS	1	24	1	1		
B	CIN_ID	CONTRIBUTOR CASE ID	ANS	1	24	1	1		
2.011	CIX	CONTRIBUTOR CASE IDENTIFIER EXTENSION	N	2	4		5	2.011:23{GS}	
2.012	LCN	FBI LATENT CASE NUMBER	ANS	11	11		1	2.012:MX-12345678{GS}	The only special character allowed is a hyphen
2.013	LCX	FBI LATENT CASE EXTENSION	N	5	5		1	2.013:98765{GS}	
2.014	FBI	FBI NUMBER/UCN	AN	1	9		1000	2.014:62760NY12{GS}	
2.015	SID	STATE IDENTIFICATION NUMBER	ANS	3	10		1000	2.015:NY12345678{GS}	OR and PA may use a hyphen in the last position
2.016	SOC	SOCIAL SECURITY ACCOUNT NUMBER	N	9	9		4	2.016:220565855{GS}	
2.017	MNU	MISCELLANEOUS IDENTIFICATION NUMBER	ANS	4	15		4	2.017:PP-1234567890P{GS}	A hyphen is allowed as a special character
2.018	NAM	NAME	AS	3	50		1	2.018:JONES,ANTHONY P{GS}	Commas, hyphens, and spaces are all allowed as special characters.

[1] For shaded cells in the minimum occurrences column, please reference Tables D-1, E-1, and I-1 for field occurrences.

Table C-1 Field Edit Specifications for Type-2 Elements

Field Number	Identifier	Field Name	Character	Field Size (not including Character Separators) Min	Field Size (not including Character Separators) Max	Occurrences Min[1]	Occurrences Max	Example	Comments/Special Characters
2.019	AKA	ALIASES	AS	3	50		10	2.019:JONES,TONY{RS}JONES,A P{GS}	Commas, hyphens, and spaces are all allowed as special characters.
2.020	POB	PLACE OF BIRTH	A	2	2		1	2.020:VA{GS}	
2.021	CTZ	COUNTRY OF CITIZENSHIP	A	2	2		10	2.021:US{GS}	
2.022	DOB	DATE OF BIRTH	N	8	8		5	2.022:19790815{GS}	
2.023	AGR	AGE RANGE	N	4	4		1	2.023:1619{GS}	Estimated age range entered using a pair of two digit numbers with no separator between them.
2.024	SEX	SEX	A	1	1		1	2.024:M{GS}	
2.025	RAC	RACE	A	1	1		1	2.025:W{GS}	
2.026	SMT	SCARS, MARKS, AND TATTOOS	AS	3	10		10	2.026:TAT R ARM{GS}	Spaces are allowed as special characters.
2.027	HGT	HEIGHT	AN	3	3		1	2.027:601{GS}	
2.028	HTR	HEIGHT RANGE	AN	6	6		1	2.028:508603{GS}	
2.029	WGT	WEIGHT	N	3	3		1	2.029:182{GS}	
2.030	WTR	WEIGHT RANGE	N	6	6		1	2.030:175190{GS}	
2.031	EYE	EYE COLOR	A	3	3		1	2.031:BLU{GS}	
2.032	HAI	HAIR COLOR	A	3	3		1	2.032:BRO{GS}	
2.033	FPC	NCIC FINGERPRINT CLASSIFICATION	AN	20	20		1	2.033:AAXXP158PMXM62POTTDI{GS}	
2.034	PAT	PATTERN LEVEL CLASSIFICATIONS	SET				10	2.034:01{US}WU{RS}02{US}LS{RS}03{US}LS{RS}04{US}LS{RS}05{US}LS{RS}06{US}RS{RS}07{US}RS{RS}08{US}LS{RS}09{US}RS{RS}10{US}RS{GS}	
A	FGP	FINGER POSITION	N	2	2	1	1		
B	PATCL	PATTERN CLASSIFICATION CODE	A	2	2	1	3		
2.035	PPA	PALM PRINTS AVAILABLE INDICATOR	A	1	1		1	2.035:Y{GS}	
2.036	PHT	PHOTO AVAILABLE INDICATOR	A	1	1		1	2.036:Y{GS}	
2.037	RFP	REASON FINGERPRINTED	ANS	1	75		1	2.037:CONSIDERING FOR EMPLOYMENT{GS}	Commas, spaces, dashes, hyphens, and slashes are all allowed as special characters
2.038	DPR	DATE PRINTED	N	8	8		1	2.038:19950324{GS}	
2.039	EAD	EMPLOYER AND ADDRESS	ANS	1	120		1	2.039:ACE CONSTRUCTION COMPANY,327 MAPLE AVE, BUFFALO,NY{GS}	Any printable 7-bit ASCII character is allowed.
2.040	OCP	OCCUPATION	ANS	1	50		1	2.040:PLUMBER{GS}	Any printable 7-bit ASCII character is allowed.

[1] For shaded cells in the minimum occurrences column, please reference Tables D-1, E-1, and I-1 for field occurrences.

Table C-1 Field Edit Specifications for Type-2 Elements

Field Number	Identifier	Field Name	Character	Field Size (not including Character Separators) Min	Field Size (not including Character Separators) Max	Occurrences Min[1]	Occurrences Max	Example	Comments/Special Characters
2.041	RES	RESIDENCE OF PERSON FINGERPRINT-ED	ANS	1	120		1	2.041:5021 OAK LEAF DRIVE, BUFFALO NY, USA., 14221{GS}	Any printable 7-bit ASCII character is allowed.
2.042	MIL	MILITARY CODE	A	1	1		1	2.042:M{GS}	
2.043	TSR	TYPE OF SEARCH REQUESTED	A	1	1		1	2.043:P{GS}	
2.044	GEO	GEOGRAPHICAL AREA OF SEARCH	A	2	2		5	2:044:MD{GS}	
2.045	DOA	DATE OF ARREST	N	8	8		1	2.045:19950324{GS}	
2.046	DOS	DATE OF ARREST - SUFFIX	A	1	1		1	2.046:L{GS}	
2.047	ASL	ARREST SEGMENT LITERAL	SET				999	2.047:19940915{US}DUI{RS}19940920{US}POSSESSION OF FIREARMS{GS}	Commas, hyphens, and spaces are all allowed as special characters.
A	DOO	DATE OF OFFENSE (DOO)	N	8	8	0	1		
B	AOL	ARREST OFFENSE LITERAL (AOL)	ANS	1	300	1	1		Any printable 7-bit ASCII character is allowed.
2.051	CSL	COURT SEGMENT LITERAL	SET				999	2.051:19940930{US}DUI{US}5 DAYS JAIL, PAY COURT COSTS{US}CONVICTED{US}01{RS}19940930{US}POSSESSION OF FIREARMS{US}10 DAYS JAIL, PAY COURT COSTS, $50{US}CONVICTED{US}02{GS}	
A	CDD	COURT DISPOSITION DATE	N	8	8	0	1		
B	COL	COURT OFFENSE LITERAL	ANS	1	300	1	1		Any printable 7-bit ASCII character is allowed.
C	CPL	OTHER COURT SENTENCE PROVISION LITERAL	ANS	1	300	1	1		Any printable 7-bit ASCII character is allowed.
D	CDN	COURT DISPOSITION	A	1	32	1	1		Text Value from CDN Values Table
E	CCT	COURT COUNT NUMBER	N	2	3	0	1		
2.053	OFC	OFFENSE CATEGORY	N	1	1		1	2.053:1{GS}	
2.054	SSD	CUSTODY OR SUPERVISORY STATUS - START DATE	N	8	8		1	2.054:19940930{GS}	
2.055	SLE	CUSTODY OR SUPERVISORY STATUS LITERAL	ANS	1	300		1	2.055:RELEASED BY COURT ORDER{GS}	Any printable 7-bit ASCII character is allowed. First character must not be a space.
2.056	ICO	IDENTIFICATION COMMENTS	ANS	1	50		1	2.056:ARMED AND DANGEROUS{GS}	Any printable 7-bit ASCII character is allowed.
2.057	FNR	FINGER NUMBER(S) REQUESTED	N	2	2		13	2.057:01{RS}06{RS}10{GS}	
2.059	SRF	SEARCH RESULTS FINDINGS	A	1	1		1	2.059:N{GS}	
2.060	MSG	STATUS/ERROR MESSAGE	ANS	1	300		1000	2.060:MATCH MADE AGAINST SUBJECTS FINGERPRINTS ON 05/01/94. PLEASE NOTIFY SUBMITTING STATE IF MATCH RESULTS{GS}	Any printable 7-bit ASCII character is allowed.

[1] For shaded cells in the minimum occurrences column, please reference Tables D-1, E-1, and I-1 for field occurrences.

Table C-1 Field Edit Specifications for Type-2 Elements

Field Number	Identifier	Field Name	Character	Field Size (not including Character Separators) Min	Field Size (not including Character Separators) Max	Occurrences Min[1]	Occurrences Max	Example	Comments/Special Characters
2.061	CST	CASE TITLE	ANS	1	50		1	2.061:ARMED ROBBERY FIRST COUNTY{GS}	Any printable 7-bit ASCII character is allowed.
2.062	IMT	IMAGE TYPE	N	1	2		1000	2.062:1{RS}2{RS}3{RS}4{RS}5{GS}	
2.064	CAN	CANDIDATE LIST	SET				99	2.064:273849CA2{US}BROWN,JOHN D{RS}83625NY{US}COLLINS,TERRY G{GS}	Commas, hyphens, and spaces are all allowed as special characters.
A	UCN	UNIVERSAL CONTROL NUMBER	AN	1	9	1	1		
B	NAM	NAME	AS	3	30	1	1		
2.065	RSR	REPOSITORY STATISTICS RESPONSE	ANS	1	96,000		1	2.065:(ASCII TEXT DATA){GS}	Any printable 7-bit ASCII character is allowed.
2.067	IMA	IMAGE CAPTURE EQUIPMENT	SET				1	2.067:DBI{US}1134{US}12345{GS}	Any printable 7-bit ASCII character is allowed.
A	MAK	ORIGINATING FINGERPRINT READING SYSTEM MAKE	ANS	1	25	1	1		
B	MODL	ORIGINATING FINGERPRINT READING SYSTEM MODEL	ANS	1	25	1	1		
C	SERNO	ORIGINATING FINGERPRINT READING SYSTEM SERIAL NUMBER	ANS	1	50	1	1		
2.070	RAP	REQUEST FOR ELECTRONIC RAP SHEET	A	1	1		1	2.070:Y{GS}	
2.071	ACN	ACTION TO BE TAKEN	ANS	0	300		1	2.071:IF NON-IDENT, SUBMIT TO UNSOLVED BIOMETRIC FILE{GS}	Commas, hyphens, ampersands, slashes, number signs, underscores, and spaces are all allowed as special characters.
2.072	FIU	FINGERPRINT IMAGE(S) UPDATED	AN	1	2		13	2.072:01{RS}02{RS}05{RS}07{RS}08{RS}11{RS}13{GS}	
2.073	CRI	CONTROLLING AGENCY IDENTIFIER	ANS	9	9		3	2.073:NY0303000{GS}	
2.074	FGP	FRICTION RIDGE GENERALIZED POSITION	N	2	2		99	2.074:01{RS}02{RS}03{RS}04{RS}05{RS}06{RS}07{RS}08{RS}09{RS}10{GS]	
2.075	ERS	ELECTRONIC RAP SHEET	ANS	4	200,000		1	2.075:(ASCII TEXT DATA){GS}	Any printable 7-bit ASCII character is allowed.
2.078	PEN	PENETRATION QUERY RESPONSE	N	2	2		1	2.078:10{GS}	
2.079	NCR	NUMBER OF CANDIDATES RETURNED	N	1	2		1	2.079:10{GS}	
2.080	EXP	RESPONSE EXPLANATION	ANS	1	50		1	2.080:PHOTO NOT FOUND FOR SPECIFIED DOA DOS{GS}	Any printable 7-bit ASCII character is allowed.
2.082	REC	RESPONSE CODE	A	1	1		1	2.082:Y{GS}	

[1] For shaded cells in the minimum occurrences column, please reference Tables D-1, E-1, and I-1 for field occurrences.

Table C-1 Field Edit Specifications for Type-2 Elements

Field Number	Identifier	Field Name	Character	Field Size (not including Character Separators) Min	Field Size (not including Character Separators) Max	Occurrences Min[1]	Occurrences Max	Example	Comments/Special Characters
2.083	ULF	UNSOLVED BIOMETRIC FILE	A	1	1		1	2.083:Y{FS}	
2.084	AMP	AMPUTATED OR BANDAGED	SET				13	2.084:03{US}XX{RS}09{US}UP{GS}	
A	FGP	FINGER POSITION	N	2	2	1	1		
B	AMPCD	AMPUTATED OR BANDAGED CODE	A	2	2	1	1		
2.086	SCNA	SUBJECT CONTROL NUMBER	AN	1	10		1	2.086:3124{GS}	
2.087	TAA	TREAT AS ADULT	A	1	1		1	2.087:Y{GS}	
2.088	NOT	NOTE FIELD	ANS	1	1,000		1	2.088:NOTE{GS}	Any printable 7-bit ASCII character is allowed.
2.089	MSC	MATCHSCORE	N	1	6		99	2.089:1200{GS}	
2.091	RCD1	RIDGE CORE DELTA ONE FOR SUBPATTERN CLASSIFICATION	SET				10	2.091:01{US}13{RS}02{US}6{RS}03{US}11{RS}04{US}10{RS}05{US}11{RS}06{US}11{RS}07{US}12{RS}08{US}10{RS}09{US}13{RS}10{US}11{GS}	
A	FGP	FINGER POSITION	N	2	2	1	1		
B	RCN1	RIDGE COUNT NUMBER 1	N	1	2	1	3		
2.092	RCD2	RIDGE CORE DELTA TWO FOR SUBPATTERN CLASSIFICATION	SET				10	2.092:01{US}10{RS}02{US}0{RS}03{US}0{RS}04{US}0{RS}05{US}0{RS}06{US}0{RS}07{US}0{RS}08{US}0{RS}09{US}0{RS}10{US}0{GS}	
A	FGP	FINGER POSITION	N	2	2	1	1		
B	RCN2	RIDGE COUNT NUMBER 2	N	1	2	1	3		
2.095	RFR	REQUEST FEATURES RECORD	A	1	1		1	2.095:Y{GS}	
2.096	RPR	REQUEST PHOTO RECORD	A	1	1		1	2.096:Y{GS}	
2.098	NDR	NAME OF DESIGNATED REPOSITORY	N	1	3		10	2.098:1{GS}	
2.2007	SDOB	SUBMITTED DATE OF BIRTH	N	8	8		1	2.2007:10470123{GS}	
2.2008	SNAM	SUBMITTED NAME	AS	3	50		1	2.2008:JONES, ANTHONY P{GS}	Commas, hyphens, and spaces are all allowed as special characters.
2.2010	NIR	NUMBER OF IMAGES REQUESTED	N	1	2		1	2.2010:2{GS}	
2.2015	RBXD	RAP BACK EXPIRATION DATE	N	8	8		1	2.2015:20100101{GS}	
2.2018	DNAC	DNA IN CODIS FLAG	A	1	1		1	2.2018:N{GS}	
2.2020	RBR	RAP BACK RECIPIENT	ANS	9	19		9	2.2020:NY0303000{GS}	
2.2021	IFS	IDENTIFICATION FIREARMS SALES	A	1	1		1	2.2021:D{GS}	
2.2022	CIDN	CONTRIBUTOR ASSIGNED IDENTIFICATION NUMBER	AN	10	10		1	2.2022:CINR12345{GS}	

[1] For shaded cells in the minimum occurrences column, please reference Tables D-1, E-1, and I-1 for field occurrences.

Table C-1 Field Edit Specifications for Type-2 Elements

Field Number	Identifier	Field Name	Character	Field Size (not including Character Separators) Min	Field Size (not including Character Separators) Max	Occurrences Min[1]	Occurrences Max	Example	Comments/Special Characters
2.2023	SII	SUPPLEMENTARY IDENTITY INFORMATION	ANS	4	10,000		1	2.2023:(ASCII TEXT DATA){GS}	Any printable 7-bit ASCII character is allowed.
2.2024	HTI	HIT TYPE INDICATOR	A	1	10		1	2.2024:RISC{GS}	
2.2028	BID	BIOMETRIC IMAGE DESCRIPTION	SET				1000	2.2028:12AN43215689{US}1{US}123456{US}09{US}{US}{US}{GS}	
A	SI	SUBJECT IDENTIFIER	ANS	1	50	1	1		
B	IMT	IMAGE TYPE	N	1	2	0	1		
C	BSI	BIOMETRIC SET IDENTIFIER	N	4	24	0	1		
D	FNR	FINGER NUMBER REQUESTED	N	2	2	0	1		
E	PPD	PRINT POSITION DESCRIPTOR	AN	5	5	0	1		
F	POS	SUBJECT POSE	A	1	1	0	1		
G	SMT	NCIC SMT CODE	AS	3	10	0	1		NCIC SMT codes only allow a space as a special character.
2.2029	BSI	BIOMETRIC SET IDENTIFIER	N	4	24		1000	2.2029:9283463{GS}	
2.2030	PPD	PRINT POSITION DESCRIPTOR	SET				1	2.2030:02{US}FV1{GS}	
A	FGP	FRICTION RIDGE GENERALIZED POSITION	N	1	2	1	1		
B	FIC	FINGER IMAGE CODE	AN	3	3	1	1		
2.2031	BIA	BIOMETRIC IMAGE AVAILABLE	N	1	2		1	2.2031:13{GS}	
2.2032	ATR	AUDIT TRAIL RECORD	SET				100	2.2032:NY0303000{US}20130514{US}SRL{US}1023456{US}1{US}06{US}{US}{US}{RS}NY0303000{US}20130518{US}SRB{US}3065432{US}9{US}{US}{US}F{US}{GS}	
A	ORI	ORIGINATING AGENCY IDENTIFIER	AN	9	9	1	1		
B	DAT	DATE OF DISSEMINATION	N	8	8	1	1		
C	TOT	TOT OF DISSEMINATION	A	3	16	1	1		
D	BSI	BIOMETRIC SET IDENTIFIER DISSEMINATED	N	4	24	0	1		
E	IMT	IMAGE TYPE DISSEMINATED	N	1	2	0	1		
F	FNR	FRICTION RIDGE POSITION REQUESTED	N	2	2	0	1		
G	PPD	PRINT POSITION DESCRIPTION	AN	5	5	0	1		
H	POS	SUBJECT POSE	A	1	1	0	1		
I	SMT	NCIC SMT CODE	AS	3	10	0	1		NCIC SMT codes only allow a space as a special character.

[1] For shaded cells in the minimum occurrences column, please reference Tables D-1, E-1, and I-1 for field occurrences.

Table C-1 Field Edit Specifications for Type-2 Elements

Field Number	Identifier	Field Name	Character	Field Size (not including Character Separators) Min	Field Size (not including Character Separators) Max	Occurrences Min[1]	Occurrences Max	Example	Comments/Special Characters
2.2033	CNL	CANDIDATE INVESTIGATIVE LIST	SET				297		
A	SI	SUBJECT IDENTIFIER	ANS	1	50	1	1		
B	NAM	MASTER NAME	AS	3	50	0	1		NAM allows commas, hyphens, and spaces as special characters
C	BSI	BIOMETRIC SET IDENTIFIER	N	4	24	0	1		
D	IMT	IMAGE TYPE	N	1	2	0	1		
E	FGP	FRICTION RIDGE GENERALIZED POSITION	N	2	2	0	1		
F	PPD	PRINT POSITION DESCRIPTOR	AN	5	5	0	1	2.2033:123456789{US}DOE, JOHN{US}12345{US}9{US}{US} {US}2000{US}25{US}1{US}01{US} {US} F{US}{GS}	
G	MSC	MATCH SCORE	N	1	6	0	1		
H	BIA	BIOMETRIC IMAGE AVAILABLE	N	1	2	0	1		
I	NDR	NAME OF DESIGNATED REPOSITORY	NS	1	400	0	1		NDR value list, separated by commas
J	IDC	INFORMATION DESIGNATION CHARACTER	N	2	2	0	1		
K	NOT	NOTE FIELD	ANS	1	1,000	0	1		Note Field allows any printable 7-bit ASCII character.
L	POS	SUBJECT POSE	A	1	1	0	1		
M	SMT	NCIC SMT CODE	AS	3	10	0	1		NCIC SMT codes only allow a space as a special character.
2.2034	ULR	UNSOLVED LATENT RETAINED	A	1	1		1	2.2034:Y{GS}	
2.2035	EVI	EVENT IDENTIFIER	N	4	24		1	2.2035:9283463{GS}	
2.2036	POS	SUBJECT POSE	A	1	1		1	2.2036:F{GS}	
2.2037	ESI	EXTERNAL SUBJECT IDENTIFIER	ANS	1	50		1000	2.2037:12EF345678{GS}	
2.2039	RBMI	RAP BACK MAINTENANCE INDICATOR	A	1	1		1	2.2039:R{GS}	Acceptable values are R, D, A, C, and U. Value of N is currently not being used.
2.2040	RBT	RAP BACK TRIGGER	N	1	2		40	2.2040:7{GS}	
2.2041	RBNI	RAP BACK ACTIVITY NOTIFICATION IDENTIFIER	N	4	24		10	2.2041:12345{GS}	Field should not include any leading zeroes.
2.2046	TLI	TIER LEVEL INDICATOR	N	1	1		1	2.2046:2{GS}	
2.2047	RAR	RETURN ALL RECORDS INDICATOR	A	1	1		1	2.2047:Y{GS}	
2.2048	RBSI	RAP BACK SUBSCRIPTION IDENTIFIER	N	4	24		1	2.2048:12345{GS}	Field should not include any leading zeroes.

[1] For shaded cells in the minimum occurrences column, please reference Tables D-1, E-1, and I-1 for field occurrences.

Table C-1 Field Edit Specifications for Type-2 Elements

Field Number	Identifier	Field Name	Character	Field Size (not including Character Separators) Min	Field Size (not including Character Separators) Max	Occurrences Min[1]	Occurrences Max	Example	Comments/Special Characters
2.2049	RBTD	RAP BACK TERM DATE	N	8	8		1	2.2049:19940930{GS}	This field is not being used as there are no fees associated with Rap Back Services at this time.
2.2050	RBSL	RAP BACK SUBSCRIPTION LIST	ANS	1	10485760		1	2.2050:(ASCII TEXT DATA){GS}	
2.2051	HNOTI	HIT NOTIFICATION INDICATOR	A	1	1		1	2.2051:Y{GS}	
2.2052	MAI	MAINTENANCE ACTION INDICATOR	A	3	10		1	2.2052:REPLACE{GS}	
2.2054	RBSD	RAP BACK SUBSCRIPTION DATE	N	8	8		1	2.2054:19940930{GS}	
2.2055	SMS	SMT SIZE	SET				1		
A	HGT	HEIGHT	N	1	3	1	1	2.2055:3{US}5{GS}	
B	WID	WIDTH	N	1	3	1	1		
2.2058	SMD	SMT DESCRIPTORS	SET				9		
A	SMI	SMT CODE INDICATOR	A	3	8	1	1		
B	TAC	TATTOO CLASS	A	4	8	0	1	2.2058:TATTOO{US}PLANT{US}ROSE{US}WITH THORNS{GS}	
C	TSC	TATTOO SUBCLASS	A	3	9	0	1		
D	TDS	TATTOO DESCRIPTION	ANS	1	256	0	1		
2.2059	TCL	TATTOO COLOR	SET				9		
A	TC1	TATTOO COLOR CODE 1	A	3	7	1	1		
B	TC2	TATTOO COLOR CODE 2	A	3	7	0	1		
C	TC3	TATTOO COLOR CODE 3	A	3	7	0	1	2.2059:RED{US}GREEN{GS}	
D	TC4	TATTOO COLOR CODE 4	A	3	7	0	1		
E	TC5	TATTOO COLOR CODE 5	A	3	7	0	1		
F	TC6	TATTOO COLOR CODE 6	A	3	7	0	1		

[1] For shaded cells in the minimum occurrences column, please reference Tables D-1, E-1, and I-1 for field occurrences.

Table C-1 Field Edit Specifications for Type-2 Elements

Field Number	Identifier	Field Name	Character	Field Size (not including Character Separators) Min	Field Size (not including Character Separators) Max	Occurrences Min[1]	Occurrences Max	Example	Comments/Special Characters
2.2061	BIE	BIOMETRIC IMAGE ENROLLMENT	SET				61	2.2061:123456789{US}9{US}F{US}{GS}	
A	BSI	BIOMETRIC SET IDENTIFIER	N	4	24	1	1		
B	IMT	IMAGE TYPE	N	1	2	1	1		
C	POS	SUBJECT POSE	A	1	1	0	1		POS is populated when IMT=9
D	SMT	SCARS, MARKS, AND TATTOOS	AS	3	10	0	1		SMT is populated when IMT=10. NCIC SMT codes only allow a space as a special character.
2.2062	RBNF	RAP BACK ACTIVITY NOTIFICATION FORMAT	N	1	1		1	2.2062:2{GS}	
2.2063	RBOO	RAP BACK OPT OUT IN-STATE INDICATOR	A	1	1		1	2.2063:Y{GS}	
2.2064	RBUD	RAP BACK USER DEFINED	SET				10	2.2064:PAROLE OFFICER{US}DOE, JOHN{GS}	
A	RBFN	RAP BACK FIELD NAME	ANS	1	50	1	1		
B	RBFT	RAP BACK FIELD TEXT	ANS	1	100	1	1		
2.2065	RBC	RAP BACK CATEGORY	A	1	2		1	2.2065:CS{GS}	
2.2067	RBDI	RAP BACK DISCLOSURE INDICATOR	A	1	1		1	2.2067:Y{GS}	
2.2068	DTR	DATE RANGE	N	16	16		1	2.2068:1994093019950930{GS}	The first eight numerals indicate the earliest date of expiration and the second eight numerals the latest date of expiration. There is no separator character used between the two dates.
2.2069	RBTED	RAP BACK TRIGGERING EVENT DETAILS	SET				10	2.2069:20140513{US}5{US}NCIC WANTED PERSON ENTRY FROM ORI - NY0303000: NIC/12345, DATE OF WARRANT 20140511{GS}	
A	DORBE	DATE OF RAP BACK EVENT	N	8	8	1	1		
B	RBT	RAP BACK TRIGGER	N	1	2	0	1		
C	RBEI	RAP BACK EVENT INFORMATION	ANS	1	300	0	1		
2.2070	RBATN	RAP BACK ATTENTION INDICATOR	ANS	3	50		1	2.2070:DET J Q PUBLIC{GS}	Any printable 7-bit ASCII character with the exception of the period is allowed.
2.2071	RBST	RAP BACK SUBSCRIPTION TERM	AN	1	2		1	2.2071:2{GS}	

[1] For shaded cells in the minimum occurrences column, please reference Tables D-1, E-1, and I-1 for field occurrences.

Table C-1 Field Edit Specifications for Type-2 Elements

Field Number	Identifier	Field Name	Character	Field Size (not including Character Separators) Min	Field Size (not including Character Separators) Max	Occurrences Min[1]	Occurrences Max	Example	Comments/Special Characters
2.2072	POC	POINT OF CONTACT	SET				1	2.2072:Uncle Sam Biometric Support Center{US}304-555-1212{GS}	NAM allows commas, hyphens, and spaces as special characters.
A	NAM	NAME	AS	3	50	1	1		
B	PHONE	PHONE NUMBER	ANS	10	30	1	1		
2.2073	BIL	BIOMETRIC IMAGE LIST	SET				1000	2.2073:123456789{US}12345{US}20140304{US}9{GS}	
A	SI	SUBJECT IDENTIFIER	ANS	1	50	1	1		
B	BSI	BIOMETRIC SET IDENTIFIER	N	4	24	1	1		
C	BCD	BIOMETRIC CAPTURE DATE	N	8	8	1	1		
D	IMT	IMAGE TYPE	N	1	2	1	1		
2.2100	SED	CUSTODY OR SUPERVISORY STATUS -END DATE	N	8	8		1	2.2100:19940930{GS}	
2.2101	SST	SUPERVISED STATUS TYPE	A	3	3		8	2.2101:MAN{GS}	
2.2102	RSC	REASON SUPERVISION CANCELLED	ANS	1	300		1	2.2102:REVOKED,20120215{GS}	
2.2103	STT	SUPERVISION TRANSFERRED TO	ANS	9	9		1	2.2103:NY0303000{GS}	
2.2104	SRA	SUPERVISED RELEASED ACTION	A	3	3		1	2.2104:EAS{GS}	

[1] For shaded cells in the minimum occurrences column, please reference Tables D-1, E-1, and I-1 for field occurrences.

Appendix D: Summary Of Logical Record Layouts For Type-2 Identification And Verification Transactions

1.0 Introduction

Appendix D presents the summary logical record layouts for Identification and Verification transactions. Table D-1 is a summary representation of all Identification and Verification transactions. For detailed specifications of individual fields of these record sets, see Appendix C.

2.0 Interpretation of the Table

The column headers at the top of the page select a particular transaction. The row headers in the left margin give the tag number and ID for each field. The cell at the intersection of any given row and column gives the minimum and maximum occurrences for that field (row) in that transaction (column). For example, if the cardinality is 0..9 the field is optional with the possibility of up to 9 occurrences. If the cardinality is 1..9 the field is mandatory with the possibility of up to 9 occurrences. If that cell is blank, the field is not used in that record. If the minimum and maximum values are the same then only one number is given. See Appendix D Reference Notes following Table D-1, pertaining to the use of record fields with footnotes.

Table D-1 Summary of Field Lists for Identification and Verification Transactions

(Minimum/Maximum Occurrences of Each Element for Each Logical Record Type)

Tag Elem	AMN	CAR	CNA	CPDR	CPNU	DEK	DEU	DOCE	EMUF	ERRT	FANC	FAUF	FDSP	FIDR	FNDR	FVR
2.001 LEN	1	1	1	1	1	1	1	1	1	1	1	1	1	1	1	1
2.002 IDC	1	1	1	1	1	1	1	1	1	1	1	1	1	1	1	1
2.003 FFN																
2.005 RET	1	1	1 [1]	1	1	1	1	1	1		1	1		1	1	1
2.006 ATN	0..1	0..1		0..1	0..1	0..1	0..1	0..1	0..1	0..1	0..1	0..1	0..1	0..1	0..1	0..1
2.007 SCO	0..9	0..9		0..9	0..9	0..9	0..9	0..9	0..9	0..9	0..9	0..9	0..9	0..9	0..9	0..9
2.009 OCA	0..1	0..1	0..1	0..1	0..1	0..1	0..1	0..1	0..1	0..1	0..1	0..1	0..1	1	0..1	0..1
2.012 LCN																
2.013 LCX																
2.014 FBI		0..5 [5]	0..5 [5]	0..5 [5]	0..5 [5]	0..5		0..5	0..5	0..5	0..5	0..5	0..5	0..5	0..5	1
2.015 SID		0..1 [6]	0..1 [6]	0..1 [6]	0..1 [6]	0..1		0..1	0..1	0..1			0..1			0..1
2.016 SOC		0..4	0..4	0..4	0..4	0..4		0..4	0..4		0..4	0..4	0..4	0..4	0..4	0..4
2.017 MNU	0..4	0..4	0..4	0..4	0..4	0..4	0..4	0..4	0..4	0..4	0..4 [3]	0..4 [3]	0..4	0..4	0..4 [3]	0..4
2.018 NAM	1 [4]	1	1	1	1	1	1 [4]	1	1		1	1	1	1	1	1
2.019 AKA		0..10	0..10	0..10	0..10	0..10		0..10	0..10		0..10	0..10	0..10	0..10	0..10	0..10
2.020 POB		1	1	1	1	0..1		1	1		1	1	1	0..1	1	1
2.021 CTZ	0..10	0..10	0..10	0..10	0..10	0..10	0..10	0..10	0..10		0..10	0..10	0..10	0..10	0..10	0..10
2.022 DOB	1..5 [4]	1..5	1..5	1..5	1..5	1..5	1..5 [4]	1..5	1..5		1..5	1..5	1..5	0..5	1..5	1..5
2.023 AGR																
2.024 SEX	1	1	1	1	1	1	1	1	1		1	1	1	0..1	1	0..1
2.025 RAC	1	1	1	1	1	1	0..1	1	1		1	1	1	0..1	1	0..1
2.026 SMT	0..10	0..10	0..10	0..10	0..10	0..10	0..10	0..10	0..10		0..10	0..10	0..10	0..10	0..10	0..10
2.027 HGT	1	1	1	1	1	1	1	1	1		1	1	0..1	0..1	1	0..1
2.028 HTR																
2.029 WGT	1	1	1	1	1	1	1	1	1		1	1	0..1	0..1	1	0..1
2.030 WTR																
2.031 EYE	1	1	1	1	1	1	1	1	1		1	1	0..1	0..1	1	0..1
2.032 HAI	1	1	1	1	1	1	1	1	1		1	1	0..1	0..1	1	0..1
2.033 FPC																
2.034 PAT																
2.035 PPA		0..1	0..1	0..1	0..1											

Table D-1 Summary of Field Lists for Identification and Verification Transactions
(Minimum/Maximum Occurrences of Each Element for Each Logical Record Type)

Tag Elem	AMN	CAR	CNA	CPDR	CPNU	DEK	DEU	DOCE	EMUF	ERRT	FANC	FAUF	FDSP	FIDR	FNDR	FVR
2.036 PHT	0..1	0..1	0..1	0..1	0..1	0..1	0..1									
2.037 RFP								1	1		1	1		1	1	
2.038 DPR	1					1	1	1	1		1	1	1	1	1	1
2.039 EAD		0..1	0..1	0..1	0..1	0..1		0..1	0..1		0..1	0..1			0..1	
2.040 OCP		0..1	0..1	0..1	0..1			0..1	0..1		0..1	0..1			0..1	
2.041 RES	0..1	0..1	0..1	0..1	0..1	0..1	0..1	0..1	0..1		0..1	0..1			0..1	
2.042 MIL									0..1		0..1	0..1			0..1	0..1
2.043 TSR				1	0..1			0..1	0..1						1	0..1
2.044 GEO																
2.045 DOA		1	1	1	1								1			
2.046 DOS					0..1									0..1		
2.047 ASL		1..999 [2]	1..999 [2]	1..999 [2]	1..999 [2]											
2.051 CSL		0..999	0..999	0..999	0..999								1..999 [12]			
2.053 OFC																
2.054 SSD		0..1	0..1	0..1	0..1											
2.055 SLE		0..1 [9]	0..1 [9]	0..1 [9]	0..1 [9]											
2.056 ICO	0..1	0..1	0..1	0..1	0..1	0..1	0..1									0..1
2.059 SRF																
2.060 MSG										1..11						
2.061 CST																
2.067 IMA	0..1	0..1	0..1	0..1	0..1	0..1	0..1	0..1	0..1		0..1	0..1	0..1	0..1	0..1	0..1
2.070 RAP	0..1	0..1		0..1	0..1	0..1	0..1	0..1	0..1		0..1	0..1	0..1	0..1	0..1	0..1
2.071 ACN	0..1															
2.073 CRI	1..3	1..3	1..3	1..3	1..3	1..3	1..3	1..3	1..3	0..3	1..3	1..3	0..3	1..3	1..3	1..3
2.074 FGP																
2.075 ERS																
2.083 ULF																
2.084 AMP	0..13 [7]	0..13 [7]	0..13 [7]	0..13 [7]	0..13 [7]	0..13 [7]	0..13 [7]	0..13 [7]	0..13 [7]		0..13 [7]	0..13 [7]	0..13 [7]	0..13 [7]	0..13 [7]	0..13 [7]
2.087 TAA		0..1	0..1	0..1	0..1											
2.088 NOT																
2.096 RPR	0..1	0..1		0..1	0..1	0..1	0..1				0..1	0..1	0..1	0..1	0..1	

Table D-1 Summary of Field Lists for Identification and Verification Transactions
(Minimum/Maximum Occurrences of Each Element for Each Logical Record Type)

Tag Elem	AMN	CAR	CNA	CPDR	CPNU	DEK	DEU	DOCE	EMUF	ERRT	FANC	FAUF	FDSP	FIDR	FNDR	FVR
2.098 NDR	0..10	0..10		0..10	0..10	0..10	0..10				0..10	0..10		0..10	0..10	
2.2007 SDOB										1 FC1						
2.2008 SNAM										1 FC1						
2.2015 RBXD		0..1		0..1	0..1						0..1	0..1			0..1	
2.2018 DNAC																
2.2020 RBR		0..9		0..9	0..9						0..9	0..9			0..9	
2.2021 IFS													1			
2.2023 SII																
2.2030 PPD																
2.2031 BIA																
2.2035 EVI																
2.2037 ESI	0..1	0..1		0..1	0..1	0..1	0..1				0..1	0..1			0..1	
2.2040 RBT		0..40		0..40	0..40						0..40	0..40			0..40	
2.2046 TLI														1		
2.2048 RBSI																
2.2049 RBTD																
2.2051 HNOTI														0..1		
2.2054 RBSD																
2.2061 BIE																
2.2062 RBNF		0..1		0..1	0..1						0..1	0..1			0..1	
2.2063 RBOO		0..1		0..1	0..1						0..1	0..1			0..1	
2.2064 RBUD		0..10		0..10	0..10						0..10	0..10			0..10	
2.2065 RBC		0..1		0..1	0..1						0..1	0..1			0..1	
2.2067 RBDI		0..1		0..1	0..1											
2.2070 RBATN		0..1		0..1	0..1						0..1	0..1			0..1	
2.2071 RBST											0..1	0..1			0..1	
2.2072 POC														0..1		

Table D-1 Summary of Field Lists for Identification and Verification Transactions
(Minimum/Maximum Occurrences of Each Element for Each Logical Record Type)

Tag Elem	LFS	LSR	MAP	MPR	NFUE	NFUF	NNDR	RPIS	RPISR	SRE
2.001 LEN	1	1	1	1	1	1	1	1	1	1
2.002 IDC	1	1	1	1	1	1	1	1	1	1
2.003 FFN	0..1	0..1								
2.005 RET			1	1	1	1	1			
2.006 ATN	1	0..1	0..1	0..1	0..1	0..1	0..1	1	1	0..1
2.007 SCO	0..9	0..9	0..9	0..9	0..9	0..9	0..9			0..9
2.009 OCA			0..1	0..1	0..1	0..1	0..1	0..1	0..1	0..1
2.012 LCN		0..1								
2.013 LCX		0..1								
2.014 FBI		0..1 [10]	0..5		0..5	0..5	0..5		0..2	0..1 [8]
2.015 SID		0..5 [10]	0..1		0..1	0..1				0..1
2.016 SOC		0..4 [11]	0..4	0..4	0..4	0..4	0..4			
2.017 MNU	0..4	0..4 [11]	0..4	0..4	0..4	0..4	0..4 [3]			
2.018 NAM		0..1 [10]	1	1	1	1	1	0..1	0..1	1
2.019 AKA		0..10	0..10	0..10	0..10	0..10	0..10			
2.020 POB	0..1	0..1 [10]	1	0..1	1	1	1		0..1	
2.021 CTZ		0..10 [11]	0..10	0..10	0..10	0..10	0..10			
2.022 DOB		0..5 [11]	1..5	1..5	1..5	1..5	1..5	0..1		
2.023 AGR	0..1									
2.024 SEX	0..1	0..1 [11]	1	1	1	1	1	0..1		
2.025 RAC	0..1	0..1 [11]	1	1	1	1	1			
2.026 SMT	0..10	0..10 [11]	0..10	0..10	0..10	0..10	0..10			
2.027 HGT		0..1 [11]	1	1	1	1	1			
2.028 HTR	0..1									
2.029 WGT		0..1 [11]	1	1	1	1	1			
2.030 WTR	0..1									
2.031 EYE	0..1	0..1 [11]	1	1	1	1	1			
2.032 HAI	0..1	0..1 [11]	1	1	1	1	1			
2.033 FPC		0..1								
2.034 PAT	0..10	0..10 [11]								

Table D-1 Summary of Field Lists for Identification and Verification Transactions
(Minimum/Maximum Occurrences of Each Element for Each Logical Record Type)

Tag Elem	LFS	LSR	MAP	MPR	NFUE	NFUF	NNDR	RPIS	RPISR	SRE
2.035 PPA		0..1								
2.036 PHT				0..1						
2.037 RFP			1		1	1	1			
2.038 DPR		0..1	1	1	1	1	1			
2.039 EAD			0..1	0..1	0..1	0..1	0..1			0..1
2.040 OCP			0..1	0..1	0..1	0..1	0..1			0..1
2.041 RES			0..1	0..1	0..1	0..1	0..1			0..1
2.042 MIL							0..1			
2.043 TSR					0..1	0..1	1			
2.044 GEO	0..5									
2.045 DOA										
2.046 DOS										
2.047 ASL	0..999 [3]									
2.051 CSL										
2.053 OFC	1									
2.054 SSD										
2.055 SLE										
2.056 ICO				0..1						
2.059 SRF		1							1	1
2.060 MSG		0..1							0..1	0..11
2.061 CST	1	1								
2.067 IMA	0..1		0..1	0..1	0..1	0..1	0..1	0..1	0..1	
2.070 RAP	0..1		0..1	0..1	0..1	0..1	0..1	0..1		
2.071 ACN		0..1		0..1					0..1	
2.073 CRI	0..3	0..3	1..3	1..3	1..3	1..3	1..3	1..3	0..3	1..3
2.074 FGP	0..10	0..10								
2.075 ERS		0..1							0..1	0..1
2.083 ULF	0..1									
2.084 AMP			0..13 [7]	0..13 [7]	0..13 [7]	0..13 [7]	0..13 [7]	0..13 [7]		
2.087 TAA										0..1

Table D-1 Summary of Field Lists for Identification and Verification Transactions
(Minimum/Maximum Occurrences of Each Element for Each Logical Record Type)

Tag Elem	LFS	LSR	MAP	MPR	NFUE	NFUF	NNDR	RPIS	RPISR	SRE
2.088 NOT	0..1								1	
2.096 RPR			0..1	0..1	0..1	0..1	0..1	0..1		
2.098 NDR			0..10	0..10	0..10	0..10	0..10	1..10		
2.2007 SDOB										0..1
2.2008 SNAM										0..1
2.2015 RBXD			0..1		0..1	0..1	0..1			0..1
2.2018 DNAC										0..1
2.2020 RBR			0..9		0..9	0..9	0..9			0..9
2.2021 IFS										
2.2023 SII									0..1	
2.2030 PPD	0..10									
2.2031 BIA		0..1								0..1
2.2035 EVI										0..1
2.2037 ESI			0..1	0..1	0..1	0..1	0..1			0..1
2.2040 RBT			0..40		0..40	0..40	0..40			0..40
2.2046 TLI										
2.2048 RBSI										0..1
2.2049 RBTD										0..1
2.2051 HNOTI										
2.2054 RBSD										0..1
2.2061 BIE										0..36
2.2062 RBNF			0..1		0..1	0..1	0..1			0..1
2.2063 RBOO			0..1		0..1	0..1	0..1			0..1
2.2064 RBUD			0..10		0..10	0..10	0..10			0..10
2.2065 RBC			0..1		0..1	0..1	0..1			0..1
2.2067 RBDI										0..1
2.2070 RBATN			0..1		0..1	0..1	0..1			0..1
2.2071 RBST			0..1		0..1	0..1	0..1			0..1
2.2072 POC										

APPENDIX D - REFERENCE NOTES

1. For this transaction, this field must contain a 'Y'.
2. The DOO portion of this field is optional, but should be provided if known. ASL is required when the submission contains a RET = 'Y'.
3. This field is mandatory for applicant submissions from DIS and OPM.
4. It is obviously not expected that full Name and Date of Birth of Unknown Deceased and Amnesia victims will be known. These fields, however, must be submitted with formatted information.
5. FBI number must be present if known for inquiry prints.
6. Field is mandatory if fingerprint submission is from an NFF State.
7. This field is mandatory if any finger is either amputated or a rolled impression was not made.
8. An UCN may be returned depending upon transaction results. No FBI number is returned when none is assigned (e.g., Non-Identification with RET = 'N'). UCN will be returned for any submission resulting in an Identification against the Criminal File or when a Non-Identification results in an add to the Criminal File or Civil file.
9. CSL must be included where submission includes SLE.
10. This field will be returned in the response if subject identification is made.
11. Field is optional unless Identification has been made and subject criminal history was requested in submission.
12. CDD and CCT are mandatory fields for this TOT.

FC1. Tag elements 2.2007 SDOB and 2.2008 SNAM will be added to the ERRT as mandatory with 1 occurrence (Future Capability - effective 10/2018).

Appendix E: Summary Of Logical Record Layouts For Type-2 Investigation, Information, And Notification Transactions

1.0 Introduction

Appendix E presents the summary logical record layouts for all Investigation, Information, and Notification transactions which are currently active. Table E-1 is the summarized representation of all currently active Investigation and Information transactions. For detailed specifications of individual fields of these record sets, see Appendix C.

2.0 Interpretation of the Table

The column headers at the top of the page select a particular transaction. The row headers in the left margin give the tag number and ID for each field. The cell at the intersection of any given row and column gives the minimum and maximum occurrences for that field (row) in that transaction (column). For example, if the cardinality is 0..9 the field is optional with the possibility of up to 9 occurrences. If the cardinality is 1..9 the field is mandatory with the possibility of up to 9 occurrences. If that cell is blank, the field is not used in that record. If the minimum and maximum values are the same then only one number is given.

Table E-1 Summary of Field Lists for Investigation, Information, and Notification Transactions

Tag Elem	BATQ	BATR	CPR	EHRR	EQER	EQHR	EQRR	ERRB	ERRI	ERRL	ERRR	FRS	IRQ	IRR	ISR
2.001 LEN	1	1	1	1	1	1	1	1	1	1	1	1	1	1	1
2.002 IDC	1	1	1	1	1	1	1	1	1	1	1	1	1	1	1
2.003 FFN										0..1					
2.006 ATN	0..1	0..1	0..1					0..1	0..1	0..1		1	1	1	1
2.007 SCO	0..9	0..9	0..9					0..9	0..9	0..9		0..9	0..9	0..9	0..9
2.009 OCA															
2.010 CIN								0..5		0..5		1			
2.011 CIX								0..5		0..5		1			
2.014 FBI	1	1	1	0..1		0..1	0..20		0..1		0..1		0..1000	0..1	0..1000
2.015 SID									0..1					0..1	0..1000
2.016 SOC						0..1									
2.017 MNU						0..4		0..4		0..4					
2.018 NAM						1	1							0..1	
2.019 AKA						0..10									
2.020 POB						0..1						0..1			
2.021 CTZ						0..10						0..10			
2.022 DOB						1	1					0..5			
2.023 AGR												0..1			
2.024 SEX						1	1					0..1			
2.025 RAC						1	1					0..1			
2.026 SMT						0..10						0..10			
2.027 HGT						0..1									
2.028 HTR												0..1			
2.029 WGT						0..1									
2.030 WTR												0..1			
2.031 EYE						0..1						0..1			
2.032 HAI						0..1						0..1			
2.034 PAT															
2.035 PPA														0..1	
2.036 PHT														0..1	

[1] The number of candidates returned may be less than the maximum specified as a result of thresholds determined by trade study tests and the algorithm used to determine potential matches.

Table E-1 Summary of Field Lists for Investigation, Information, and Notification Transactions

Tag Elem	BATQ	BATR	CPR	EHRR	EQER	EQHR	EQRR	ERRB	ERRI	ERRL	ERRR	FRS	IRQ	IRR	ISR
2.037 RFP															
2.038 DPR															
2.039 EAD															
2.040 OCP															
2.041 RES															
2.042 MIL						0..1									
2.044 GEO												0..5			
2.045 DOA			0..1												
2.046 DOS			0..1												
2.057 FNR													0..13		
2.059 SRF															
2.060 MSG		0..1			1..11			1..11	1..11	1..11	1..11				0..1000
2.061 CST								0..1		0..1					
2.062 IMT	0..10													0..1	0..1000
2.064 CAN															
2.065 RSR															
2.067 IMA												0..1			
2.070 RAP						1									
2.073 CRI	0..3	0..3	0..3	1	1	1	1	0..3	0..3	0..3	1	1..3	0..3	0..3	0..3
2.074 FGP															
2.075 ERS				1											
2.078 PEN															
2.079 NCR							1					0..1			
2.080 EXP															
2.082 REC															
2.083 ULF												0..1			
2.084 AMP														0..13	
2.086 SCNA															
2.088 NOT												0..1			
2.089 MSC															

[1] The number of candidates returned may be less than the maximum specified as a result of thresholds determined by trade study tests and the algorithm used to determine potential matches.

Table E-1 Summary of Field Lists for Investigation, Information, and Notification Transactions

Tag Elem	BATQ	BATR	CPR	EHRR	EQER	EQHR	EQRR	ERRB	ERRI	ERRL	ERRR	FRS	IRQ	IRR	ISR
2.091 RCD1															
2.092 RCD2															
2.095 RFR													0..1		
2.098 NDR												0..10	0..1	0..1	0..1
2.2010 NIR												0..1			
2.2015 RBXD															
2.2020 RBR															
2.2022 CIDN				0..1	0..1	0..1	0..1				0..1				
2.2024 HTI															
2.2028 BID													0..1000		
2.2029 BSI	0..1													0..1	0..1000
2.2030 PPD															
2.2031 BIA														0..1	
2.2032 ATR		0..100													
2.2033 CNL															
2.2035 EVI															
2.2036 POS												0..1			
2.2037 ESI														0..1	0..1000
2.2041 RBNI															
2.2047 RAR															
2.2048 RBSI															
2.2049 RBTD															
2.2050 RBSL															
2.2054 RBSD															
2.2055 SMS															
2.2058 SMD															
2.2059 TCL															
2.2064 RBUD															
2.2068 DTR															
2.2069 RBTED															

[1] The number of candidates returned may be less than the maximum specified as a result of thresholds determined by trade study tests and the algorithm used to determine potential matches.

Table E-1 Summary of Field Lists for Investigation, Information, and Notification Transactions

Tag Elem	BATQ	BATR	CPR	EHRR	EQER	EQHR	EQRR	ERRB	ERRI	ERRL	ERRR	FRS	IRQ	IRR	ISR
2.2070 RBATN															
2.2071 RBST															
2.2073 BIL															

[1] The number of candidates returned may be less than the maximum specified as a result of thresholds determined by trade study tests and the algorithm used to determine potential matches.

Table E-1 Summary of Field Lists for Investigation, Information, and Notification Transactions

Tag Elem	LFFS	LFIS	LPNQ	LPNR	LRSQ	LRSR	PRR	RBN	RBRN	RBIHS	RBIHSR	RBRPT	RBRPTR	SPN	SRB
2.001 LEN	1	1	1	1	1	1	1	1	1	1	1	1	1	1	1
2.002 IDC	1	1	1	1	1	1	1	1	1	1	1	1	1	1	1
2.003 FFN															
2.006 ATN	1	1	0..1	0..1	1	1	0..1			0..1	0..1	0..1	0..1	0..1	1
2.007 SCO	0..9	0..9					0..9	0..9	0..9	0..9	0..9	0..9	0..9		0..9
2.009 OCA															
2.010 CIN	1	1	1	1											0..1
2.011 CIX	1	1	1	1											0..1
2.014 FBI							1	1	1	1	1			0..1	0..1
2.015 SID															
2.016 SOC															
2.017 MNU															
2.018 NAM								1	1		1			0..1	
2.019 AKA														0..10	
2.020 POB	0..1	0..1	0..1											0..1	
2.021 CTZ														0..10	
2.022 DOB								1	1		1			0..5	
2.023 AGR	0..1	0..1	0..1												
2.024 SEX	0..1	0..1	0..1											0..1	
2.025 RAC	0..1	0..1	0..1											0..1	
2.026 SMT	0..10	0..10	0..10											0..10	
2.027 HGT														0..1	
2.028 HTR	0..1	0..1	0..1												
2.029 WGT														0..1	
2.030 WTR	0..1	0..1	0..1												
2.031 EYE	0..1	0..1	0..1											0..1	
2.032 HAI	0..1	0..1	0..1											0..1	
2.034 PAT	0..10	0..10	0..10												
2.035 PPA															
2.036 PHT															

[1] The number of candidates returned may be less than the maximum specified as a result of thresholds determined by trade study tests and the algorithm used to determine potential matches.

Table E-1 Summary of Field Lists for Investigation, Information, and Notification Transactions

Tag Elem	LFFS	LFIS	LPNQ	LPNR	LRSQ	LRSR	PRR	RBN	RBRN	RBIHS	RBIHSR	RBRPT	RBRPTR	SPN	SRB
2.037 RFP															
2.038 DPR														0..1	
2.039 EAD															
2.040 OCP															
2.041 RES															
2.042 MIL															
2.044 GEO	0..5	0..5	0..5												
2.045 DOA							0..1								
2.046 DOS							0..1								
2.057 FNR															
2.059 SRF															
2.060 MSG									1				0..1	0..1	0..1
2.061 CST															
2.062 IMT														0..1	
2.064 CAN															
2.065 RSR						1									
2.067 IMA	0..1	0..1													
2.070 RAP															
2.073 CRI	0..3	0..3	0..3	0..3	0..3	0..3	0..3	1..3	1..3	0..3	0..3	0..3	1..3	0..3	0..3
2.074 FGP	0..10	0..10	0..10											0..10	
2.075 ERS								0..1			1				
2.078 PEN				1											
2.079 NCR	0..1	0..1													1
2.080 EXP							0..1								
2.082 REC							1								
2.083 ULF	0..1	0..1													0..1
2.084 AMP															
2.086 SCNA														1	
2.088 NOT	0..1	0..1													0..1
2.089 MSC															

[1] The number of candidates returned may be less than the maximum specified as a result of thresholds determined by trade study tests and the algorithm used to determine potential matches.

Table E-1 Summary of Field Lists for Investigation, Information, and Notification Transactions

Tag Elem	LFFS	LFIS	LPNQ	LPNR	LRSQ	LRSR	PRR	RBN	RBRN	RBIHS	RBIHSR	RBRPT	RBRPTR	SPN	SRB
2.091 RCD1	0..10	0..10	0..10												
2.092 RCD2	0..10	0..10	0..10												
2.095 RFR	0..1	0..1													
2.098 NDR	0..10	0..10	0..10	0..10										1	
2.2010 NIR	0..1	0..1													1
2.2015 RBXD								1	1						
2.2020 RBR												0..9			
2.2022 CIDN															
2.2024 HTI															
2.2028 BID															
2.2029 BSI														0..1	
2.2030 PPD	0..10	0..10	0..10											0..10	
2.2031 BIA														0..1	
2.2032 ATR															
2.2033 CNL															0..99[1]
2.2035 EVI															
2.2036 POS														0..1	
2.2037 ESI															
2.2041 RBNI								1		1..10	1..10				
2.2047 RAR												0..1			
2.2048 RBSI								1	1	1	1	0..1			
2.2049 RBTD								0..1	0..1						
2.2050 RBSL													0..1		
2.2054 RBSD								1	1						
2.2055 SMS															
2.2058 SMD															
2.2059 TCL															
2.2064 RBUD								0..10	0..10		0..10				
2.2068 DTR												0..1			
2.2069 RBTED								0..1			1..10				

[1] The number of candidates returned may be less than the maximum specified as a result of thresholds determined by trade study tests and the algorithm used to determine potential matches.

Table E-1 Summary of Field Lists for Investigation, Information, and Notification Transactions

Tag Elem	LFFS	LFIS	LPNQ	LPNR	LRSQ	LRSR	PRR	RBN	RBRN	RBIHS	RBIHSR	RBRPT	RBRPTR	SPN	SRB
2.2070 RBATN								0..1	0..1						
2.2071 RBST								0..1	0..1						
2.2073 BIL															0..1000

[1] The number of candidates returned may be less than the maximum specified as a result of thresholds determined by trade study tests and the algorithm used to determine potential matches.

Table E-1 Summary of Field Lists for Investigation, Information, and Notification Transactions

Tag Elem	SRL	SRT	TPIS	TPRS	TPRR	TXTSRCH	UBM	UHN	ULM	UUBD	UULD
2.001 LEN	1	1	1	1	1	1	1	1	1	1	1
2.002 IDC	1	1	1	1	1	1	1	1	1	1	1
2.003 FFN											
2.006 ATN	1	0..1	1	1	1	1	1	0..1	1	1	1
2.007 SCO	0..9	0..9	0..9	0..9	0..9	0..9					
2.009 OCA		0..1	0..1	0..1	0..1			0..1			
2.010 CIN	1					0..1	1		1	1	1
2.011 CIX	1					0..1	1		1	1	1
2.014 FBI	0..1						0..1	1	0..1	1	0..1
2.015 SID											
2.016 SOC											
2.017 MNU											
2.018 NAM							0..1		0..1		
2.019 AKA							0..10		0..10		
2.020 POB						0..1	0..1		0..1		
2.021 CTZ						0..1	0..10		0..10		
2.022 DOB						0..5	0..5		0..5		
2.023 AGR						0..1					
2.024 SEX						0..1	0..1		0..1		
2.025 RAC						0..1	0..1		0..1		
2.026 SMT						0..3	0..10		0..10		
2.027 HGT							0..1		0..1		
2.028 HTR						0..1					
2.029 WGT							0..1		0..1		
2.030 WTR						0..1					
2.031 EYE						0..1	0..1		0..1		
2.032 HAI						0..1	0..1		0..1		
2.034 PAT											
2.035 PPA									0..1		
2.036 PHT									0..1		

[1] The number of candidates returned may be less than the maximum specified as a result of thresholds determined by trade study tests and the algorithm used to determine potential matches.

Table E-1 Summary of Field Lists for Investigation, Information, and Notification Transactions

Tag Elem	SRL	SRT	TPIS	TPRS	TPRR	TXTSRCH	UBM	UHN	ULM	UUBD	UULD
2.037 RFP											
2.038 DPR									0..1		
2.039 EAD		0..1	0..1	0..1	0..1						
2.040 OCP		0..1	0..1	0..1	0..1						
2.041 RES		0..1	0..1	0..1	0..1						
2.042 MIL											
2.044 GEO						0..5					
2.045 DOA											
2.046 DOS											
2.057 FNR											
2.059 SRF											
2.060 MSG	0..1	0..1					0..1		0..1	1..11	1..11
2.061 CST											
2.062 IMT						0..1	0..1		0..1		
2.064 CAN	0..99	0..25									
2.065 RSR											
2.067 IMA											
2.070 RAP				1							
2.073 CRI	0..3	0..3	0..3	0..3	0..3	0..3	0..3	0..3	0..3	0..3	0..3
2.074 FGP	0..99								1..10		
2.075 ERS					0..1			0..1			
2.078 PEN											
2.079 NCR	1	1	0..1	0..1		0..1					
2.080 EXP											
2.082 REC											
2.083 ULF	0..1										
2.084 AMP		0..13	0..13	0..13							
2.086 SCNA	0..1						1		1		1
2.088 NOT	0..1							0..1			
2.089 MSC	0..99										

[1] The number of candidates returned may be less than the maximum specified as a result of thresholds determined by trade study tests and the algorithm used to determine potential matches.

Table E-1 Summary of Field Lists for Investigation, Information, and Notification Transactions

Tag Elem	SRL	SRT	TPIS	TPRS	TPRR	TXTSRCH	UBM	UHN	ULM	UUBD	UULD
2.091 RCD1											
2.092 RCD2											
2.095 RFR											
2.098 NDR			0..10								
2.2010 NIR	1	1	0..1			0..1					
2.2015 RBXD											
2.2020 RBR											
2.2022 CIDN											
2.2024 HTI								1			
2.2028 BID											
2.2029 BSI							0..1		0..1		
2.2030 PPD									0..10		
2.2031 BIA							0..1		0..1		
2.2032 ATR											
2.2033 CNL	0..297	0..99									
2.2035 EVI											
2.2036 POS						0..1	0..1				
2.2037 ESI											
2.2041 RBNI											
2.2047 RAR											
2.2048 RBSI											
2.2049 RBTD											
2.2050 RBSL											
2.2054 RBSD											
2.2055 SMS						0..1					
2.2058 SMD						0..9					
2.2059 TCL						0..9					
2.2064 RBUD											
2.2068 DTR											
2.2069 RBTED											

1 The number of candidates returned may be less than the maximum specified as a result of thresholds determined by trade study tests and the algorithm used to determine potential matches.

Table E-1 Summary of Field Lists for Investigation, Information, and Notification Transactions

Tag Elem	SRL	SRT	TPIS	TPRS	TPRR	TXTSRCH	UBM	UHN	ULM	UUBD	UULD
2.2070 RBATN											
2.2071 RBST											
2.2073 BIL											

1 The number of candidates returned may be less than the maximum specified as a result of thresholds determined by trade study tests and the algorithm used to determine potential matches.

Appendix F: FBI/CJIS Image Quality Specifications

1.0 Scope and Purpose

These specifications apply to: (1) systems that scan and capture fingerprints[1] in digital, softcopy form, including hardcopy scanners such as tenprint card scanners, and live scan devices, altogether called "fingerprint scanners"; and (2) systems utilizing a printer to print digital fingerprint images to hardcopy called "fingerprint printers." These specifications provide criteria for ensuring the image quality of fingerprint scanners and printers that input fingerprint images to, or generate fingerprint images from within, the NGI system.

Digital softcopy images obtained from fingerprint scanners must have sufficient quality to allow the following functions to be performed: (l) conclusive fingerprint comparisons (identification or non-identification decision), (2) fingerprint classification, (3) automatic feature detection, and (4) overall Automated Fingerprint Identification System (AFIS) search reliability. The fingerprint comparison process requires a high-fidelity image. Finer detail, such as pores and incipient ridges, are needed because they can play an important role in the comparison.

The fingerprint examiners in the FBI/CJIS environment will depend upon softcopy-displayed images of scanned fingerprints to make comparisons, but will also need to accept and utilize hardcopy images in certain instances. For example, some contributors may print cards from live scan or card scan systems for submission to the FBI/CJIS. These hardcopy prints will be obtained from printers that include printing algorithms optimized for fingerprints. The printer's principal function is to produce life-size prints of digital fingerprints that have met FBI/CJIS format requirements and provide sufficient print quality to support fingerprint comparisons (i.e., support identification or non-identification decisions).

The image quality requirements covered in the following Section 2 for fingerprint scanners, Section 3 for fingerprint identification flats, Section 4 for fingerprint printers, Section 5 for mobile scanners, and Section 6 for fast-track requirements have associated test procedures that are described in detail in the Test Procedures document (see Appendix F References).

These test procedures will be used by the FBI/CJIS principally for certification of fingerprint systems; they may also be used in acceptance testing and in performance capability demonstrations as an indication of capability to perform. Equipment shall be tested to meet the requirements in normal operating modes (e.g., scanners shall not be tested at slower-than-normal operating speeds in an attempt to meet geometric accuracy specifications). A vendor may recommend alternate testing methods if the test procedures given in this appendix are not applicable or cannot be applied to the particular system under test.

1 The term "fingerprint" in this appendix may also include palm print, whole hand print, or a print from other parts of the human body.

2.0 Finger/Palm Print Scanner

The fingerprint scanner must be capable of producing images that exhibit good geometric fidelity, sharpness, detail rendition, gray-level uniformity, and gray-scale dynamic range, with low noise characteristics. The images must be true representations of the input fingerprints without creating any significant artifacts, anomalies, false detail, or cosmetic image restoration effects.

The scanner's final output resolution in both sensor detector row and column directions shall be in the range: (R–0.01R) to (R+0.01R) and shall be gray-level quantized to eight bits per pixel (256 gray-levels). The magnitude of "R" is either 500 pixels per inch (ppi) or 1,000 ppi; a scanner may be certified at either one or both of these resolution levels. The scanner's true optical resolution shall be greater than or equal to R.

A scanner intended to scan standard 8.0 by 8.0 inch tenprint cards (e.g., applicant fingerprint card type FD-258 or FD-249) shall be capable of capturing an area of at least 5.0 by 8.0 inches, which captures all 14 printblocks, either each printblock as a separate image or all printblocks together as a single image. In terms of individual printblocks, Table F-1 gives the minimum capture sizes applicable to both card scan and live scan systems, with the exception that, when scanning fingerprint cards, the card form dimensions take precedence.

Table F-1 Minimum Capture Sizes

Image	Width (inches)	Height (inches)
Roll Finger	1.6*	1.5
Plain Thumb	1.0	2.0
Plain 4-Fingers (Sequence Check)	3.2	2.0
Plain 4-Fingers (Identification Flat)	3.2	3.0
Full Palm	5.5**	8.0
Half Palm	5.5**	5.5**
Writer's Palm	1.75	5.0

* Live scanner must be capable of capturing at least 80% of full roll arc length, where full roll arc length is defined as arc length from nail edge to nail edge.

** 5.0" impressions will be accepted, although not preferred

The practice of "stitching" together images that were not captured simultaneously is prohibited. Individual images with the proper position code should be transmitted by the contributor. For example, non-simultaneous plain image captures from the two individual thumbs should be submitted as two individual image records with position codes 11 and 12 instead of being submitted as a single image record with position code 15. In this example, submitting individual images for each thumb avoids the masking of sequence errors. Another example is the submission of full palm print images. If the upper and lower palms are captured separately, they should be submitted as individual images using position codes 25 and 26 for the right hand or position codes 27 and 28 for the left hand. Under no circumstances should upper and lower palm images be stitched together and submitted as full palm impressions (position code 21 or 23), as the geometric relationship between minutiae is altered within the stitched image, which affects matching accuracy.

2.1 Linearity

Requirement:

When measuring a stepped series of uniform target reflectance patches (e.g., step tablet) that substantially cover the scanner's gray range, the average value of each patch shall be within 7.65 gray-levels of a linear, least squares regression line fitted between target reflectance patch values (independent variable) and scanner output gray-levels (dependent variable).

Background:

All targets used in Image Quality Specifications (IQS) compliance verification are expected to be scanned with the scanner operating in a linear input/output mode. Linearity enables valid comparisons of test measurements with requirements (e.g., a system's spatial frequency response in terms of Modulation Transfer Function (MTF) is, strictly speaking, a linear systems concept). Linearity also facilitates comparisons between different scanners through the "common ground" concept. In atypical cases, a small amount of smooth, monotonic nonlinearity may be acceptable for the test target scans (i.e., when it is substantially impractical and unrepresentative of operational use) to force linearity on the scanner under test (e.g., some live scan devices). Linearity is not a requirement for the operational or test fingerprint scans, which allows for processing flexibility to overcome inadequate tonal characteristics of fingerprint samples.

2.2 Geometric Accuracy

Requirement (across-bar):

When scanning a multiple, parallel bar target, in both vertical bar and horizontal bar orientations, the absolute value of the difference between the actual distance across parallel target bars and the corresponding distance measured in the image shall not exceed the following values for at least 99.0 percent of the tested cases in each printblock measurement area and in each of the two orthogonal directions.

For 500-ppi scanner:

$D \leq 0.0007$, for $0.00 < X \leq 0.07$

$D \leq 0.01X$, for $0.07 \leq X \leq 1.50$

For 1,000-ppi scanner:

$D \leq 0.0005$, for $0.00 < X \leq 0.07$

$D \leq 0.0071X$, for $0.07 \leq X \leq 1.5$

Where:

$D = |Y-X|$

X = actual target distance

Y = measured image distance

D, X, Y are in inches

Requirement (along-bar):

When scanning a multiple, parallel bar target, in both vertical bar and horizontal bar orientations, the maximum difference in the horizontal or vertical direction, respectively, between the locations of any two points within a 1.5-inch segment of a given bar image shall not exceed 0.016 inches for at least 99.0 percent of the tested cases in each printblock measurement area and in each of the two orthogonal directions.

Background:

In this Section 2.2, the phrase: "multiple, parallel bar target" refers to a Ronchi target, which consists of an equal-width bar and space square wave pattern at 1.0 cy/mm, with high contrast ratio and fine edge definition. This target is also used to verify compliance with the scanner resolution requirement given in Section 2.0 of this appendix.

Across-bar geometric accuracy is measured across the imaged Ronchi target bars that substantially cover the total image capture area. The 500-ppi requirement corresponds to a positional accuracy of ± 1.0 percent for distances between 0.07 and 1.5 inches and a constant ± 0.0007 inches (1/3 pixel) for distances less than or equal to 0.07 inches. The 1,000-ppi requirement corresponds to a positional accuracy of ± 0.71 percent for distances between 0.07 and 1.5 inches and a constant ± 0.0005 inches (1/2 pixel) for distances less than or equal to 0.07 inches.

This measurement procedure is also used to verify the ppi resolution requirement given in Section 2.0 of this appendix.

Along-bar geometric accuracy is measured along the length of an individual Ronchi target bar in the image. For a given horizontal bar, for example, the maximum difference between bar center locations (in vertical direction), determined from bar locations measured at multiple points along a 1.5" bar segment length, is compared to the maximum allowable difference requirement (analogously for vertical bar). This requirement is to ensure that pincushion or barrel distortion over the primary area of interest (i.e., a single fingerprint) is not too large.

2.3 Spatial Frequency Response

Requirements:

The spatial frequency response shall be measured using a continuous tone sine wave target denoted as MTF measurement unless the scanner cannot obtain adequate tonal response from this target, in which case a bi-tonal bar target shall be used to measure the spatial frequency response, denoted as Contrast Transfer Function (CTF) measurement. When measuring the sine wave MTF, it shall meet or exceed the minimum modulation values given in Table F-2 in both the detector row and detector column directions and over any region of the scanner's field of view. When measuring the bar CTF, it shall meet or exceed the minimum modulation values defined by equation 2-1 or equation 2-2 (whichever applies) in both the detector row and detector column directions and

over any region of the scanner's field of view. CTF values computed from equations 2-1 and 2-2 for nominal test frequencies are given in Table F-3. None of the MTF or CTF modulation values measured at specification spatial frequencies shall exceed 1.05.

The output sine wave image or bar target image shall not exhibit any significant amount of aliasing.

Table F-2 MTF Requirement Using Sine Wave Target

Frequency (cy/mm)	Minimum Modulation for 500 ppi Scanner	Minimum Modulation for 1000 ppi Scanner	Maximum Modulation
1	0.905	0.925	1.05 at all frequencies
2	0.797	0.856	
3	0.694	0.791	
4	0.598	0.732	
5	0.513	0.677	
6	0.437	0.626	
7	0.371	0.579	
8	0.312	0.536	
9	0.255	0.495	
10	0.200	0.458	
12		0.392	
14		0.336	
16		0.287	
18		0.246	
20		0.210	

Note: Testing at 7 and 9 cy/mm is not a requirement if these frequency patterns are absent from the sine wave target.

Table F-3 Requirement Using Bar Target (Nominal Test Frequencies)

Frequency (cy/mm)	Minimum Modulation for 500 ppi Scanner	Minimum Modulation for 1000 ppi Scanner	Maximum Modulation
1.0	0.948	0.957	1.05 at all frequencies
2.0	0.869	0.904	
3.0	0.791	0.854	
4.0	0.713	0.805	
5.0	0.636	0.760	
6.0	0.559	0.716	
7.0	0.483	0.675	
8.0	0.408	0.636	
9.0	0.333	0.598	
10.0	0.259	0.563	
12.0		0.497	
14.0		0.437	
16.0		0.382	
18.0		0.332	
20.0		0.284	

Note: Testing at or near 7 and 9 cy/mm is a requirement when using a bar target.

It is not required that the bar target contain the exact frequencies listed in Table F-3; however, the target does need to cover the listed frequency range and contain bar patterns close to each of the listed frequencies. The following equations are used to obtain the specification CTF modulation values when using bar targets that contain frequencies not listed in Table F-3.

500-ppi scanner, for f = 1.0 to 10.0 cy/mm:

$$CTF = 3.04105E\text{-}04 * f^2 - 7.99095E\text{-}02 * f + 1.02774 \quad \text{(eq.2 -1)}$$

1,000-ppi scanner, for f = 1.0 to 20.0 cy/mm:

$$CTF = -1.85487E\text{-}05 * f^3 + 1.41666E\text{-}03 * f^2 - 5.73701E\text{-}02 * f + 1.01341 \quad \text{(eq.2 - 2)}$$

Background:

For MTF assessment, the single, representative sine wave modulation in each imaged sine wave frequency pattern is determined from the sample modulation values collected from within that pattern. The sample modulation values are computed from the maximum and minimum levels corresponding to the “peak” and adjacent “valley” in each sine wave period. For a sine wave image, these maximum and minimum levels represent the image gray-levels that have been locally averaged in a direction perpendicular to the sinusoidal variation and then mapped through a calibration curve into target reflectance space. Sample image modulation in target reflectance space is then defined as:

$$\text{modulation} = (\text{maximum} - \text{minimum}) / (\text{maximum} + \text{minimum})$$

The calibration curve is the curve of best fit between the image gray-levels of the density patches in the sine wave target and the corresponding target reflectance values. [It is assumed that sine wave target modulations and target density patch values are supplied by the target manufacturer.] The scanner MTF at each frequency is then defined as:

MTF = peak image modulation / target modulation

For CTF assessment, the modulations are determined directly in image space, normalized by the image modulation at zero frequency, instead of using a calibration curve. The scanner CTF at each frequency is then defined as:

CTF = peak image modulation / (zero frequency image modulation)

The bar target must contain at least 10 parallel bars at each of the higher spatial frequencies (~50% Nyquist to Nyquist frequency), which helps to ensure capture of optimum scanner – target phasing and aids investigation of potential aliasing. The bar target must also contain a very low frequency component (i.e., a large square, bar, or series of bars) whose effective frequency is less than 2.5 percent of the scanner's final output resolution. This low frequency component is used in normalizing the CTF; it must have the same density (on the target) as the higher frequency target bars.

The upper limit of 1.05 modulation is to discourage image processing that produces excessive edge sharpening, which can add false detail to an image.

Aliasing on sine wave images or bar images may be investigated by quantitative analysis and from visual observation of the softcopy-displayed image.

2.4 Signal-to-Noise Ratio (SNR)

Requirement:

The white signal-to-noise ratio (SNR) and black signal-to-noise ratio shall each be greater than or equal to 125.0 in at least 97.0 percent of respective cases within each printblock measurement area.

Background:

The signal is defined as the difference between the average output gray-levels obtained from scans of a uniform low reflectance and a uniform high reflectance target, measuring the average values over independent 0.25 by 0.25 inch areas within each printblock area. The noise is defined as the standard deviation of the gray-levels in each of these quarter-inch measurement areas. Therefore, for each high reflectance, low reflectance image pair there are two SNR values, one using the high reflectance standard deviation and one using the low reflectance standard deviation. To obtain a true measure of the standard deviation, the scanner is set up such that the white average gray-level is several gray-levels below the system's highest obtainable gray-level and the black average gray-

level is several gray-levels above the system's lowest obtainable gray-level.

2.5 Gray-Level Uniformity

Requirement – adjacent row, column uniformity:

At least 99.0 percent of the average gray-levels between every two adjacent quarter-inch-long rows and 99.0 percent between every two adjacent quarter-inch-long columns within each imaged printblock area shall not differ by more than 1.0 gray-levels when scanning a uniform low-reflectance target and shall not differ by more than 2.0 gray-levels when scanning a uniform high-reflectance target.

Requirement – pixel-to-pixel uniformity:

For at least 99.9 percent of all pixels within every independent 0.25 by 0.25 inch area located within each imaged printblock area, no individual pixel's gray-level shall vary from the average by more than 22.0 gray-levels when scanning a uniform high-reflectance target and shall not vary from the average by more than 8.0 gray-levels when scanning a uniform low-reflectance target.

Requirement – small area uniformity:

For every two independent 0.25 by 0.25 inch areas located within each imaged printblock area, the average gray-levels of the two areas shall not differ by more than 12.0 gray-levels when scanning a uniform high-reflectance target and shall not differ by more than 3.0 gray-levels when scanning a uniform low-reflectance target.

Background:

Measurements are made over multiple, independent test areas on a printblock-by-printblock basis. (For a live scanner, the entire capture area is normally considered a single printblock area). To obtain a true measure of the standard deviation, the scanner is set up such that the white average gray-level is several gray-levels below the system's highest obtainable gray-level and the black average gray-level is several gray-levels above the system's lowest obtainable gray-level.

2.6 Fingerprint Image Quality

The scanner shall provide high quality fingerprint images; the quality will be assessed with respect to the following requirements.

Requirement – Fingerprint Gray Range:

At least 80.0 percent of the captured individual fingerprint images shall have a gray-scale dynamic range of at least 200 gray-levels, and at least 99.0 percent shall have a dynamic range of at least 128 gray-levels.

Background:

Card and live scan systems at a booking station have some control over dynamic range on a subject-by-subject or card-by-card basis (e.g., by rolling an inked finger properly or by adjusting gain on a livescanner). However, with central site or file conversion systems where a variety of card types and image qualities are encountered in rapid succession, automated adaptive processing may be necessary. The eight-bits-per-pixel quantization of the gray-scale values for very low contrast fingerprints needs to more optimally represent the reduced gray-scale range of such fingerprints, but without significant saturation. The intent is to avoid excessively low contrast images without adding false detail.

Dynamic range is computed in terms of number of gray-levels present that have signal content, measuring within the fingerprint area and substantially excluding white background and card format lines, boxes, and text.

For card scanners, compliance with these dynamic range requirements will be verified using a statistically stratified sample set of fingerprint cards assembled by the FBI/CJIS. The test fingerprint card set may include cards with difficult-to-handle properties (e.g., tears, holes, staples, glued-on photos, or lamination) for testing card scanners that have automatic document feeder mechanisms. For live scanners, compliance will be verified with sets of livescans produced by the vendor.

Requirement – Fingerprint Artifacts and Anomalies:

Artifacts or anomalies detected on the fingerprint images that are due to the scanner or image processing shall not significantly adversely impact support to the functions of conclusive fingerprint comparisons (identification or non-identification decision), fingerprint classification, automatic feature detection, or overall Automated Fingerprint Identification System (AFIS) search reliability.

Background:

The fingerprint images will be examined to determine the presence of artifacts or anomalies that are due to the scanner or image processing; assessment may include measurements to quantify their degree of severity and significance. Image artifacts or anomalies such as the following non-inclusive list may be investigated.

- jitter noise effects
- sharp truncations in average gray-level between adjacent printblocks
- gaps in the gray-level histograms (i.e., zero pixels in intermediate gray-levels) or clipping to less than 256 possible gray-levels
- imaging detector butt joints
- noise streaks
- card bleed-through
- gray-level saturation

Requirement – Fingerprint Sharpness and Detail Rendition:

The sharpness and detail rendition of the fingerprint images, due to the scanner or image processing, shall be high enough to support the fingerprint functions stated in Section 1, paragraph 2.

Background:

Fingerprint sharpness and detail rendition that is due to the scanner or image processing may be investigated by employing suitable, objective image quality metrics, as well as by visual observation of the softcopy-displayed image.

2.7 Maintaining Certification

The scanner shall meet image quality specifications throughout the life of the device. Issues will be communicated to the vendor and appropriate efforts will be made to resolve problems prior to decertification.

Requirement:

The scanner shall demonstrate the ability to continually meet the image quality specifications for which it was certified.

Background:

Through periodic audits and communication with end users, fingerprint images will be examined to determine possible issues arising from the scanner or image processing. Assessment may include measurements to quantify their degree of severity and significance. Image anomalies such as the following noninclusive list may be investigated:

- Ridge misalignment
- Blurring
- Unnatural ridge flow
- Pixelation
- Halo effect
- Gray-level saturation
- Problems capturing a wide range of skin types and conditions

3.0 Identification Flats

Traditional fingerprint sets contain both rolled and plain fingerprint images. The rolled impressions support the search processing and identification functions and the plain impressions are used primarily for sequence verification. Fingerprinting systems designed for "Identification Flats" civilian background checks capture a single set of plain impressions. This single set of plain impressions must support finger sequence verification, search processing, and identification.
Image quality has historically been a challenge for civil background checks. Some programs

require a large number of relatively low-volume capture sites, which makes training difficult. A key goal for identification flats scanners is to reduce the need for training so that inexperienced users consistently capture quality fingerprint images.

The identification flats scanner shall meet all of the requirements stated in Section 2 of this appendix as well as the following requirements.

Requirement – Capture Protocol:

The system shall provide a simple capture protocol.

Background:

A simple capture protocol supports the inexperienced user's ability to more consistently capture high quality fingerprints. Identification flats collection systems will be evaluated for their ability to produce a very small rate of failure to enroll in an operational setting. Systems with a minimum capture area of 3.2 inches (width) by 3.0 inches (height) that can capture four fingers simultaneously in an upright position will be considered in compliance with the simple capture protocol requirement. Other capture approaches will require specific testing and documentation.

Requirement – Verifiable Finger Sequence Data:

The method of capturing the fingers shall result in very low probability of error in the finger numbers.

Background:

The fingerprinting system's capture protocol will be evaluated for its ability to capture verifiable finger sequence data. Based on the Ohio WebCheck National trial systems with a minimum capture area of 3.2 inches (width) by 3.0 inches (height) that capture the left four fingers simultaneously, the right four fingers simultaneously and the two thumbs simultaneously (4-4-2) in an upright position will be considered in compliance with the finger sequence requirements. Other capture approaches will require specific testing and documentation.

4.0 Fingerprint Printer

Requirement:

The fingerprint printer, consisting of a printer and specialized print algorithm, must be capable of producing hardcopy images that exhibit good geometric fidelity, sharpness, detail rendition, gray-level uniformity, and gray-scale dynamic range characteristics, with low noise, no significant creation of false detail, and with the capability to support magnified viewing of the print without breakup of the virtual fingerprint image presented to the eye. This printer is expected to provide high throughput, good repeatability, good print permanency characteristics, and low cost per

copy. A typical fingerprint printer is a gray-scale laser printer[2] with 1,200 black/white dots per inch resolution combined with a printing algorithm that typically includes image contrast and printer gamma/highlight/lowlight adjustments, image rescaling, and an error diffusion model with randomized dot dither printing applied to the rescaled image.

The print system's principal function is to produce life-size prints of digital fingerprints that have met FBI/CJIS format requirements as specified in EBTS and ANSI/NIST-ITL and to provide sufficient print quality to support fingerprint comparisons (i.e., support identification or non-identification decisions). The printer should also have the capability to print gray-scale mugshots and property/evidence photos (not necessarily using a fingerprint printing algorithm), as well as print black and white documents containing text and graphics, onto 8.5 x 11.0 inch paper.
A required printer resolution is 500 ppi, which produces the required life-size print when the input digital fingerprint is 500 ppi or when a 1,000-ppi digital fingerprint is down-scaled to 500 ppi prior to printing. In both cases, all other 500-ppi printer requirements must also be met.

Background:

Verification of the specific performance requirements in Section 4 of this appendix is accomplished by evaluating the printer's output print of an FBI/CJIS-designated test set of digitized fingerprints and FBI/CJIS-designated digital test target. Requirements compliance verification is performed by a combination of visual assessments of the test prints (aided by visual instruments) and computer-aided assessments of scanned digital images of the test prints. With respect to those requirements that depend on assessments of print scans for compliance verification, the scan resolution is expected to be twice the required gray-scale print resolution (e.g., a print with 500-ppi resolution is scanned at 1,000 ppi) and the scanner is expected to be setup in a calibrated linear input/output, grayscale reflectance capture mode.

4.1 Spatial Frequency Response

Requirement:

The printer shall provide sufficient spatial frequency response to support visually resolving the required printer resolution in orthogonal directions on the print.

Background:

Resolution verification is performed by printing high-contrast digital bar targets and visually inspecting the print under magnification. (When employing a laser printer with a fingerprint printing algorithm, it is recognized and accepted that the effective resolution may vary in complex image areas such as a fingerprint.)The resolution limit is a single point on the spatial frequency response curve; the entire curve may be measured by scanning the print of an appropriate target, performing appropriate computer-aided assessment on the scan, and comparing results to a

2 In this appendix, "laser printer" refers to a type of printer in which a laser beam "draws" an electrostatic image of an input signal onto a drum. Toner (typically dry powder) is then transferred to the charged areas of the drum, which then transfers the toner onto paper, where it is fused by heat, creating a black/white/gray image.

minimally acceptable spatial frequency response curve.

4.2 Gray-Levels

Requirement:

At least 16 gray-levels shall be visually distinguishable on the print.

Background:

Visual observation of the print of a digital target containing a step tablet is used to verify the 16- gray-level requirement. A higher number of gray-levels is expected to be distinguishable by appropriate computer-aided assessment of the scanned image of the print.

4.3 Dynamic Range

Requirement:

The printer shall have the capability to print an input digital image gray range of at least 130, excluding print black saturation and print white saturation.

Background:

The print of a digital step tablet is scanned, each pixel's output gray-level value is converted to the corresponding print reflectance value, and the average print reflectance value within each step is computed. A plot of step average print reflectance versus input digital step tablet gray-level must result in a gray range of at least 130, excluding any saturation on the low end (print black reflectance) and high end (print white reflectance). (The scanner output gray-level to print reflectance conversion is established by generating the scanner's input/output curve using a calibrated step tablet.)

4.4 Geometric Accuracy and Print Scale

Requirement (across-bar):

When printing a digital bar target containing multiple, parallel bars, the absolute value of the difference between the measured distance across parallel bars on the print and the correct distance on the print shall not exceed the values given in Table F-4 for at least 97 percent of the tested "short distance" and "medium distance" cases in each direction (vertical and horizontal).

Table F-4 Printer Geometric Accuracy Requirements

Distance (D)	Distance Range (X)	Comment
$D \leq 0.001$	$0.00 < X \leq 0.07$	Short distance
$D \leq 0.015X$	$0.07 < X \leq 1.50$	Medium distance
$D \leq 0.010X$	$4.75 < X \leq 8.00$	Long distance

Table Note: $D = |Y-X|$
X = correct distance = digital target pixels / required print resolution
Y = measured distance on print
D, X, Y are in inches

The average of all "medium distance" test cases, in each direction, shall not exceed the corresponding values of D given in Table F-4.

The average of all "long distance" test cases, in each direction, shall not exceed the corresponding values of D given in Table F-4.

Requirement (along-line):

Straight target lines printed parallel to or at a 45-degree angle to the paper or card edges shall be straight on the print with no significant waviness, bow, or "staircasing."

Background:

The across-bar requirement corresponds to a positional accuracy of ± 1.5 percent for distances greater than 0.07 inches and less than or equal to 1.5 inches and a constant ± 0.001 inches for distances less than or equal to 0.07 inches. With a 500 ppi-required print resolution, a digital bar target with a period of 18 pixels is used, which corresponds to a bar frequency of 500 / (25.4*18) cy/mm on the print, when printed life-size. The measured distance on the print can be obtained by scanning the print and applying computer-assisted assessment on the resulting digital image. The requirement takes into account the geometric errors inherent in a good quality scanner. For life-size printing, the print scale error is measured over a distance in the 0.07 to 1.50 inch range. Print scale error is equal to: (correct distance - measured distance) / correct distance. For lifesize printing at 500 ppi, a 1.5 percent allowable error in distance, measured in inches, is equivalent to an allowable print ppi error equal to ± 7.5 ppi.

The along-line requirement can be assessed visually, aided (e.g., by a straight-edge and magnifying lens).

4.5 Noise

Requirement:

For a required printer resolution of 500 ppi, the noise magnitude shall be less than 0.120 at each

average print reflectance level when noise magnitude is defined as the standard deviation of print reflectance values within an area on the print corresponding to a constant gray-level on the input digital target. (Print reflectance is measured in fractional units: 0.0 to 1.0 range.)

Background:

A digital step tablet is printed, the print is scanned at 1000 ppi, each pixel's output gray-level value is converted to the corresponding print reflectance value, and the standard deviation of print reflectance values within each step is computed. The scanner output gray-level to print reflectance conversion is established by generating the scanner's input/output curve using a calibrated step tablet.

4.6 Print Polarity and Color

Requirement:

The printed fingerprints shall appear as dark gray-to-black ridges on a light gray-to-white background.

4.7 Print Permanence

Requirement:

The printed fingerprints shall not smear or smudge with normal handling.

4.8 Print Stability

Requirement:

Both the fingerprints and the card stock or paper on which they are printed shall retain their visually neutral (black, white, gray) color over time.

4.9 Hazardous Materials

Requirement:

The prints shall not produce any health hazard as a result of handling. They shall not produce any noxious, annoying, or unpleasant odors when accumulated in large numbers and handled in areas having limited ventilation.

Background:

Requirements 4.7 (print permanence), 4.8 (print stability), and 4.9 (hazardous materials) are met by standard laser printers.

4.10 Fingerprint Prints

4.10.1 Print Types Requirements

Requirement:

The printer shall have the capability to print a set of individual livescans or previously scanned, individual inked fingerprints, life-size and in their correct printblock locations, onto a standard tenprint fingerprint card (fingerprint card type FD-258), or print onto blank 8.0 by 8.0 inch card stock, or print onto blank 8.5 x 11.0 inch plain paper. In the case of printing fingerprints onto blank card stock or blank paper, the printer shall also print the printblock boundary lines and labeling that normally appears on a standard tenprint card.

The printer shall have the capability to print a previously scanned tenprint card in its entirety and life-size onto blank 8.0 x 8.0 inch card stock or onto blank 8.5 by 11.0 inch plain paper.

NOTE: Printer margins for any printblock when printed on 8.0 x 8.0 inch card stock may not exceed 10% of the image width dimensions. For an image 1.6 inches wide, this means a margin of 0.16 inches or less. In worst case, truncation of card edges is acceptable. Any shrinkage resulting in image reduction is unacceptable.

The printer shall have the capability to print a single fingerprint magnified up to five times beyond life-size onto 8.5 by 11.0 inch plain paper.

When printing in tenprint card format onto tenprint card stock, blank card stock, or plain paper, the printer shall also have the capability to print labels, bar chart, step tablet, and finger condition codes, all on the same print with the fingerprints. Figure 8 illustrates the printing of this auxiliary information. Sections 4.10.2 through 4.10.5 of this appendix give the detailed requirements.

4.10.2 Labels

Requirement:

When printing fingerprints in tenprint card format, the printing process shall have the capability to print a character string of scanner information within the left four finger plain impression printblock and a character string of printer information within the right four finger plain impression printblock. Each character string shall be printed along the top inside edge of the respective printblock in a type font and size that is large enough for human readability without the aid of a magnifier and small enough so as not to unduly impinge on fingerprint structure.

The scanner information string shall include the scanner make, model number, and serial number, if available, and/or similar information on the scanner system. The printer information string shall include the printer make, model number, and serial number, if available, and shall include similar information on the fingerprint printing algorithm, if available, and shall include the date and time of printing.

The scanner and printer character strings shall be printed without a background, border, or any other type of added surround.

Background:

Information for the scanner string can typically be obtained from the EBTS Type-2 record field identified as "IMA 2.067 – Image Capture Equipment," which includes scanner system make, model number, and serial number.

A printer is certified as a combination of a specific brand/model printer and fingerprint printing algorithm; the latter may also have a name or version designation.

Character string printing: a solid background (e.g., white) to the character string is unacceptable because it would unnecessarily obliterate some parts of fingerprints on some images. Individual characters with no background that overprint the fingerprint would obliterate a much smaller proportion of the fingerprint and are acceptable. Printing the character strings in an open space created by offsetting printblocks 6-10 from printblocks 11-14 is unacceptable because it changes the dimensions of the standard tenprint card format, and it cannot adequately accommodate fingerprints that stray across printblock boundaries.

Proper text size typically would correspond to a height of a numeral or upper case letter being in the range: 0.067 inches to 0.095 inches.

4.10.3 Bar Chart

Requirement:

When printing fingerprints in tenprint card format, the printing process shall have the capability to print a bar chart consisting of equally spaced horizontal black bars and vertical black bars printed at the required printer resolution.

The bar chart shall be positioned at the top edge within the right thumb plain impression printblock and shall have a maximum width of 0.8 inches and a maximum height of 0.125 inches. The bar chart shall contain at least 10 parallel bars in each direction, vertical and horizontal, with a bar length of at least 0.0625 inches (not necessarily the same number of bars, or same bar length, in the two directions).

An optional, uniform mid-grey-level patch may be included between the horizontal and vertical bar components.

The bar chart shall be printed without border or any other type of added surround.

Background:

For a 500-ppi printer requirement, the limiting frequency is 250 cycles per inch, which implies that 250 black bars per inch are printed, where the 0.002-inch width of an individual bar is equal to the width of the white space between two bars.

If a mid-gray patch between the vertical and horizontal bar patterns appears to have the same overall gray-level on the print as the two bar patterns, then this may indicate that the printer gamma/highlight/lowlight settings are optimum and/or that the printer toner supply was adequate for printing.

4.10.4 Step Tablet

Requirement:

When printing fingerprints in tenprint card format, the printing process shall have the capability to print a step tablet, consisting of two adjacent horizontal bands, each band having 16 gray-levels. One band should progressively darken from left to right and the other band should progressively darken from right to left. The 16 digital input gray-levels corresponding to one band shall be identically the same as for the other band, and both bands shall substantially cover the total gray-level range. This step tablet shall be positioned at the top edge within the left thumb plain impression printblock and shall have a total width between 0.5 inches and 0.8 inches and a total height between 0.0625 inches and 0.125 inches.

The step tablet shall be printed without border or any other type of added surround.

Background:

If the top band and bottom band appear "balanced" on the print (i.e., the same mid-gray level appears in the middle of both the top and bottom bands) then this may indicate that the printer gamma/highlight/lowlight settings are optimum.

4.10.5 Finger Condition Codes

Requirement:

When printing fingerprints in tenprint card format, the printing process shall have the capability to notate the presence of an abnormal finger condition in the appropriate printed fingerprint block for those cases where the EBTS Type-2 record field identified as "AMP" (amputated or bandaged) is available and/or for those cases where similar information is available from other sources, such as a state system (possibly with other notation codes).

4.10.6 Fingerprint Quality

Requirement:

The printer shall produce sufficient print quality to allow usable viewing of life-size fingerprint prints under magnification to support fingerprint comparisons (i.e., identification or non-identification decisions). The print image shall maintain its sharpness and detail rendition structure up to at least 4X magnification to the extent that ridges and ridge joints, bifurcations, and terminations that exist in the input digital image to the printer can be substantially discerned by the human observer on the output print without being "lost in the noise." In addition, the printing process shall not create significant false detail (e.g., it shall not create ridges where none existed in the input digital image). See *Examination of the Impact of Fingerprint Spatial Area Loss on Matcher Performance in Various Mobile Identification Scenarios* under Appendix F References for more information.

Background:

Assessment of the requirement is performed by visual inspection of the print augmented by appropriate quantitative analysis of the scanned print.

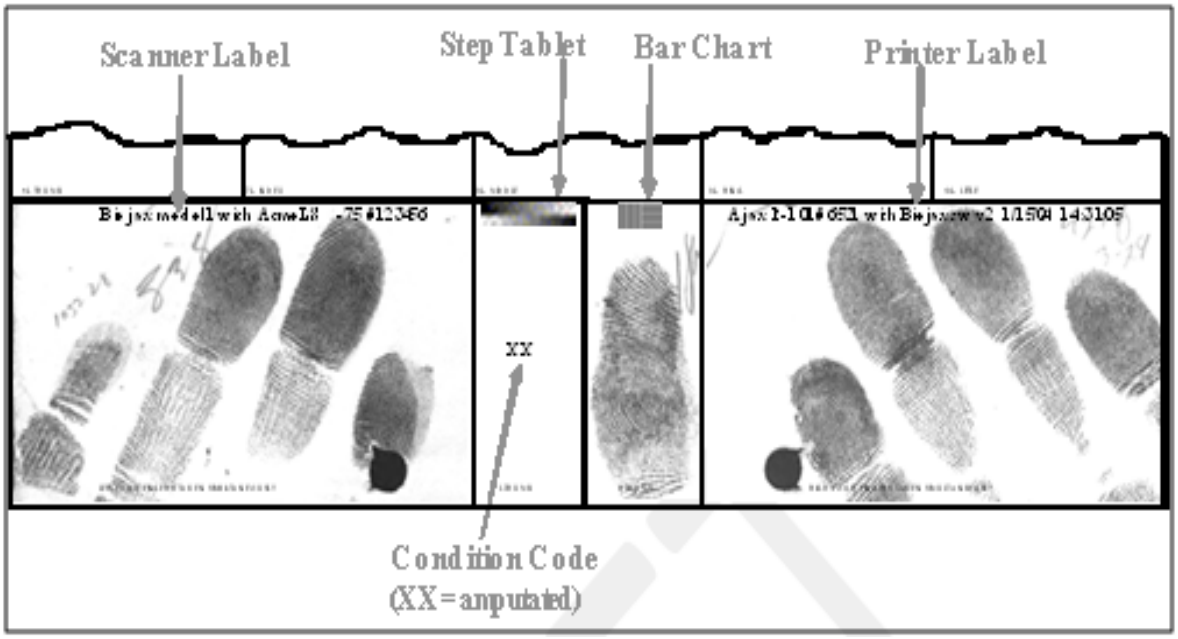

Figure 8 Auxiliary Information Printed in Tenprint Card Format Print (Example Text)

4.11 Maintaining Certification

The printer shall meet image quality specifications throughout the life of the device. Issues will be communicated to the vendor and appropriate efforts will be made to resolve problems prior to decertification.

Requirement:

The printer shall demonstrate the ability to continually meet the image quality specifications for which it was certified.

Background:

Through periodic audits and communication with end users, fingerprint images will be examined to determine possible issues arising from the printer. Assessment may include measurements to quantify their degree of severity and significance. Any changes, such as the following noninclusive list, may be investigated:

- Spatial frequency response
- Blurring
- Dot dithering pattern
- Resolution
- Availability of bar chart and step tablet

5.0 Mobile ID

A mobile identification device is a livescanner viewed in the context of a portable biometric acquisition station (i.e. one that is not intended to be stationary and hardwired to a much larger system used for comparing or matching biometric samples). Since mobile devices may satisfy a variety of collection modalities with differing image size and accuracy requirements, a set of Fingerprint Acquisition Profiles (FAP) for fingerprint images has been developed. Table F-5 summarizes the image sizes and IQS specification requirements relevant for each image interchange profile allowed by the FBI/CJIS for an RPIS transaction.

Requirement – Image Size/Impression Type:

For a given FAP, the minimum image dimensions and full range of simultaneous number of fingers specified in Table F-5 shall be met. The device shall be able to collect flat impressions. Rolled acquisition is optional.

Requirement – Image Quality:

As indicated in Table F-5, two IQS specification requirements are supported for mobile ID scanners. When the IQS specification requirement is PIV, then all requirements in Personal Identity Verification (PIV) Image Quality Specifications for Single Finger Capture Devices and the Maintaining Certification requirement of this document (Section 2.7) shall be met. When the IQS specification requirement is Appendix F, then all the requirements in Section 2 of this document shall be met.

Background:

FAP 30 and lower are for single finger sensors and are primarily for identification/verification, while FAP 40 and above support simultaneous image capture which is faster, reduces sequence errors and produces higher quality images for both enrollment and identification searches. The FBI/CJIS recommends that acquisition devices meet a minimum of FAP 30 to allow the following functions to be performed: (1) automatic feature detection; (2) fingerprint classification; (3) overall AFIS search reliability; and (4) conclusive fingerprint comparisons. Agencies submitting RPIS transactions should select a FAP level based on their specific requirements.

Table F-5 Mobile ID IQS Requirements

Fingerprint Acquisition Profile (FAP)	Minimum Image Dimensions (WxH in inches)	IQS Specification Requirements	Simultaneous # of Fingers
10	0.5 x 0.65	PIV	1
20	0.6 x 0.8	PIV	1
30	0.8 x 1.0	PIV	1
40	1.6 x 1.5	PIV	1-2
45	1.6 x 1.5	App F	1-2
50	3.2 x 2.0	App F	1-4
60	3.2 x 3.0	App F	1-4

NOTE: Although the RISC will accept submissions from Mobile Fingerprint Scanners that do not meet these requirements, the FBI/CJIS Division reserves the right to enforce these, or any other, scanner requirements deemed necessary to meet accuracy levels established by the FBI/CJIS Division's Advisory Policy Board. NGI RISC participants should refer to the FBI/CJIS Biometric Specification (https://www.fbibiospecs.cjis.gov) IAFIS Certified Products List/Mobile ID Category for a list of mobile identification devices which have been certified by the FBI/CJIS as tested and in compliance with the FBI/CJIS's Next Generation Identification (NGI) initiatives and Integrated Automated Fingerprint Identification System (IAFIS) Image Quality Specifications (IQS). The certification process is not intended to endorse one product over a competitor's product but merely to certify that the product meets FBI/CJIS standards and that, between two products that meet FBI/CJIS standards, the FBI/CJIS does not recommend one over the other.

6.0 Fast-Track Certification

First, to review, full certification testing is required when:

- An uncertified livescan device is presented together with suitable SW such that the combination prospectively meets all IQS requirements.

- A hardcopy scanner or printer (typically a COTS product) is presented together with suitable SW such that the combination prospectively meets all IQS requirements. (The specific SW may be sold separately from the COTS HW, but only the specific HW/SW combination is certified.)

- Substantive modifications are made to an already-certified device. For example, the sensor or optics is changed, the capture area is expanded, the signal processing is substantively changed, or a 500 ppi-certified device is extended for operation at 1000 ppi.

Fast track certification testing is sufficient when:

- A vendor adds "value" to an already certified device by, for example, integrating additional SW and/or HW and repackaging the combination to create a Value-Added Reseller (VAR) label system. However, if there is a reasonable expectation that the added SW, HW, or repackaging will affect the image quality performance of the original certified device, then full certification testing would be required.

- A vendor makes relatively minor modifications to a previously certified device. For example, a membrane is added to (or deleted from) a certified livescanner, an automatic document feeder is added to a certified manual-feed cardscanner, or a 1000 ppi-certified scanner is operated at 500 ppi using the same optics, sensor, and illumination.

Table F-6 presents the test data requirements for some common fast track certification scenarios; for test requirements for other scenarios, contact the FBI/CJIS. In addition to the test data, the vendor seeking fast track certification must provide a written statement to the FBI/CJIS (letter or e-mail) affirming that the previously certified fingerprint device has not been changed with respect to device functions, hardware, firmware, or software that could reasonably be expected to affect image quality performance.[3] Specific to a scanner, the optics and optical layout, sensor, illumination, image capture electronics, and signal processing have not been changed and the maximum capture area has not been increased.

No certification testing is necessary when:

- The original recipient of a certification wishes to change the model name and there are no other changes to the certified product.

- The original recipient of a certification wishes to repackage the device if there is a reasonable expectation that the repackaging will not affect the image quality performance of the device. All device HW/SW components that may affect image quality performance must remain the same as they were when originally certified. For example, repackaging a device into a ruggedized cabinet or repackaging a floor-standing device as a desktop device by separating out the host computer would not necessarily require further testing, but changing the optical path or optical train of elements to accommodate the repackaging would normally require retesting.

- A reseller of a certified device wishes to sell the device under its own label or under the original label. The certified device must remain intact, unmodified, and as a stand-alone product with no added HW/SW. If relabeled by reseller, the certification is only valid when that label does in fact contain the originally certified device (i.e., no blanket certification for rebrands).[4]

- An end user receives a certified device to be used "as is" without modification (an end-user does not need its own certification).

3 Except for inherent image quality changes in specific situations, e.g., when recertifying a 1000 ppi scanner at 500 ppi.

4 If there is no Fast Track testing, the device will not be listed under the resellers name in the FBI certification list. Instead it will remain listed / certified under the original vendor and device name. A separate reseller listing requires some Fast Track data.

Table F-6 Fast Track Certification Procedures (Common Scenarios)

Fast Track Certification	Type	Test Data to be Provided to FBI/CJIS	Requirements Compliance within Appendix F
Livescanner	Vendor A incorporates vendor B's certified device into vendor A's value-added system. Vendor adds (or deletes) platen membrane to certified device.	Livescans from 5 subjects (10 rolls and 4 plains, each subject) Sinewave or bar target scans (target supplied by vendor) and livescans from 5 subjects (10 rolls and 4 plains, each subject).	Section 2.6 Sections 2.1, 2.3, and 2.6
Cardscanner	Vendor A incorporates vendor B's certified device into vendor A's value-added system.	Ten 10-print card scans (cards supplied by FBI/CJIS)	Section 2.6
Cardscanner with Automatic Document Feeder (ADF)	Vendor recertifies manual card scanner for use with ADF.	100 10-print card scans (cards supplied by FBI/CJIS)	Section 2.6
Printer	Vendor A incorporates vendor B's certified device into vendor A's value-added system.	Print of printer test target (target supplied by FBI/CJIS)	all subsections under section 4.0 pertaining to digital test target
1000 ppi fingerprint scanner as 500 ppi fingerprint scanner	Vendor recertifies its own fingerprint scanner in alternate operating mode.	Cardscanner: Sinewave target scans (target supplied by vendor) and ten 10-print card scans (cards supplied by FBI/CJIS) Livescanner: Sinewave or bar target scans (target supplied by vendor) and livescans from 5 subjects (10 rolls and 4 plains, each subject)	Sections 2.1, 2.3, and 2.6

Appendix F - Definition of Terms:

HW – Hardware, which may include firmware

SW – Software, which may include firmware

COTS – Commercial-Off-The-Shelf product

Vendor – generic term to include Original Equipment Manufacturer (OEM), reseller, VAR, product assembler, systems integrator, and similar.

Full IQS Certification – a complete set of test data covering all IQS requirements is submitted.

Fast Track IQS Certification – a partial set of test data covering defined IQS requirements is submitted.

APPENDIX F - REFERENCES

Mobile ID Device Best Practice Recommendation and Specification v2, Nov 2015, National Institute of Standards and Technology (NIST), available at
http://nvlpubs.nist.gov/nistpubs/SpecialPublications/NIST.SP.500-280v2.pdf

Personal Identity Verification (PIV) Image Quality Specifications for Single Finger Capture Devices, FBI/CJIS Biometric Specifications, 10 July 2006,
available at https://www.fbibiospecs.cjis.gov/Document/Get?fileName=pivspec.pdf

Test Procedures for Verifying IAFIS Image Quality Requirements for Fingerprint Scanners and Printers, v1.4, MITRE Technical Report MTR050016R7, Feb 2013.

NIST Special Publication 500-290 - Data Format for the Interchange of Fingerprint, Facial, and Other Biometric Information, January 2011, National Institute of Standards and Technology (NIST), available at http://www.nist.gov/itl/iad/ig/ansi_standard.cfm

Examination of the Impact of Fingerprint Spatial Area Loss on Matcher Performance in Various Mobile Identification Scenarios, March 2014,
http://nvlpubs.nist.gov/nistpubs/ir/2014/NIST.IR.7950.pdf

Appendix G: Reserved

Appendix H: Descriptors And Field Edit Specifications For Type-7 Logical Records

Table H-1 summarizes the content of each of the fields in the Type-7 record. However, the byte counts do not account for any separator characters.

For EBTS transactions, Field 1.012: Nominal transmitting resolution (NTR) specifies the nominal transmitting resolution for fingerprint images transmitted in Type-4 or Type-7 records. For Type-7 records, the transmitting resolution shall either be 495-505ppi (500+-1%) or 990-1010ppi (1000+-1%). For transactions that do not contain Type-4 or Type-7 fingerprint image records, this field shall be set to “00.00”. A single transaction can only contain multiple Type-4 and/or Type-7 records if all images have the same resolution.

Table H-1 Field List for Type-7 (Miscellaneous Image) Logical Records

Identifier	Condition	Field Name	Character Type	Field Size Per Occurrence		Occurrences		Max. No. of Bytes
				Min.	Max.	Min.	Max.	
LEN	M	LOGICAL RECORD LENGTH	B	4	4	1	1	4
IDC	M	INFORMATION DESIGNATION CHARACTER	B	1	1	1	1	1
IMP	M	IMPRESSION TYPE	B	1	1	1	1	1
FGP	M	FINGER POSITION	B	6	6	1	1	6
ISR	M	IMAGE SCANNING RESOLUTION	B	1	1	1	1	1
HLL	M	HORIZONTAL LINE LENGTH	B	2	2	1	1	2
VLL	M	VERTICAL LINE LENGTH	B	2	2	1	1	2
GCA	M	GRAYSCALE COMPRESSION ALGORITHM	B	1	1	1	1	1
IMG	M	IMAGE DATA	B	1	6,200,000	1	1	6,200,000

Appendix I: Summary Of Logical Record Layouts For Type-2 Data Management Transactions

1.0 Introduction

Appendix I contains the summary of the Type-2 logical record layouts for Data Management transactions. Table I-1 is a summarization representation of these transactions. For detailed specifications of individual fields of these record sets, see Appendix C.

2.0 Interpretation of the Table

The column headers at the top of the page select a particular transaction. The row headers in the left margin give the tag number and ID for each field. The cell at the intersection of any given row and column gives the minimum and maximum occurrences for that field (row) in that transaction (column). For example, if the cardinality is 0..9 the field is optional with the possibility of up to 9 occurrences. If the cardinality is 1..9 the field is mandatory with the possibility of up to 9 occurrences. If that cell is blank, the field is not used in that record. If the minimum and maximum values are the same then only one number is given.

Table I-1 Summary of Field Lists for Data Management Transactions

(Minimum/Maximum Occurrences of Each Element for Each Logical Record Type)

Tag Element	BDEC	BDECR	BDEL	BDELR	CDEL	CDELR	CPD	DSPE	DSPR	ERRA	FIS	FISR	PDR	RBSCRM	RBSCVL
2.001 LEN	1	1	1	1	1	1	1	1	1	1	1	1	1	1	1
2.002 IDC	1	1	1	1	1	1	1	1	1	1	1	1	1	1	1
2.006 ATN	1	1	1	1	1	1	0..1	0..1	0..1	0..1	1	1	0..1	0..1	0..1
2.007 SCO							0..9	0..9	0..9	0..9	0..9	0..9	0..9	0..9	0..9
2.009 OCA														1	
2.010 CIN			0..1	0..1											
2.011 CIX			0..1	0..1											
2.014 FBI	1	1	0..1	1..25	1	1	1	1	1		1	1	1..5	1	1
2.015 SID								0..1			0..1	0..1			
2.016 SOC															
2.017 MNU															
2.018 NAM											0..1	0..1		1	1
2.019 AKA															
2.020 POB															
2.021 CTZ															
2.022 DOB														1	1
2.024 SEX															
2.025 RAC															
2.026 SMT															
2.027 HGT															
2.029 WGT															
2.031 EYE															
2.032 HAI															
2.034 PAT															
2.035 PPA											0..1				

[1] DPR must be included if fingerprints are included.

[2] Subfields CDD and CCT are mandatory fields for this TOT.

Table I-1 Summary of Field Lists for Data Management Transactions
(Minimum/Maximum Occurrences of Each Element for Each Logical Record Type)

Tag Element	BDEC	BDECR	BDEL	BDELR	CDEL	CDELR	CPD	DSPE	DSPR	ERRA	FIS	FISR	PDR	RBSCRM	RBSCVL
2.038 DPR											1				0..1[1]
2.039 EAD															
2.045 DOA							1	0..1					1		
2.046 DOS							0..1						0..1		
2.047 ASL															
2.051 CSL								1..999 [2]							
2.054 SSD															
2.055 SLE															
2.059 SRF	1														
2.060 MSG		0..1		0..1		0..1				1..11		0..11			
2.062 IMT															
2.070 RAP														0..1	
2.071 ACN									1						
2.072 FIU												0..13			
2.073 CRI	1..3	1..3	1..3	1..3	0..3	0..3	1..3	0..3	0..3	0..3	0..3	1..3	1..3	0..3	0..3
2.074 FGP	0..1														
2.075 ERS															
2.080 EXP													0..1		
2.082 REC													1		
2.084 AMP											0..13				
2.086 SCNA															
2.098 NDR															
2.2015 RBXD														0..1	1
2.2020 RBR														0..9	0..9
2.2021 IFS								1							

[1] DPR must be included if fingerprints are included.
[2] Subfields CDD and CCT are mandatory fields for this TOT.

Table I-1 Summary of Field Lists for Data Management Transactions
(Minimum/Maximum Occurrences of Each Element for Each Logical Record Type)

Tag Element	BDEC	BDECR	BDEL	BDELR	CDEL	CDELR	CPD	DSPE	DSPR	ERRA	FIS	FISR	PDR	RBSCRM	RBSCVL
2.2029 BSI	0..1		0..1												
2.2034 ULR	0..1														
2.2035 EVI					1			0..1	0..1		0..1				0..1
2.2037 ESI															
2.2039 RBMI															
2.2040 RBT														0..40	0..40
2.2046 TLI															
2.2048 RBSI															
2.2049 RBTD															
2.2051 HNOTI															
2.2052 MAI								1							
2.2054 RBSD															
2.2061 BIE												0..61			
2.2062 RBNF														1	1
2.2063 RBOO														0..1	0..1
2.2064 RBUD														0..10	0..10
2.2065 RBC														1	1
2.2067 RBDI														0..1	
2.2070 RBATN														0..1	0..1
2.2071 RBST															0..1
2.2072 POC															
2.2100 SED															
2.2101 SST															
2.2102 RSC															
2.2103 STT															
2.2104 SRA															

[1] DPR must be included if fingerprints are included.
[2] Subfields CDD and CCT are mandatory fields for this TOT.

Table I-1 Summary of Field Lists for Data Management Transactions
(Minimum/Maximum Occurrences of Each Element for Each Logical Record Type)

Tag Element	RBSR	RBMNT	RBMNTR	SPMNT	SPMNTR	SRNR	SRNRR	ULD	ULDR	XACT	XACTR	XMNT	XMNTR
2.001 LEN	1	1	1	1	1	1	1	1	1	1	1	1	1
2.002 IDC	1	1	1	1	1	1	1	1	1	1	1	1	1
2.006 ATN	0..1	0..1	0..1	0..1	0..1	1	1	1	1				
2.007 SCO	0..9	0..9	0..9	0..9	0..9	0..9	0..9	0..9	0..9				
2.009 OCA	0..1					0..1							
2.010 CIN								1	1				
2.011 CIX								1	1				
2.014 FBI	1	1	1	0..1	1	1	1			1	1	1	1
2.015 SID													
2.016 SOC				0..4		0..4							
2.017 MNU				0..4		0..4							
2.018 NAM	1	0..1	1	0..1	0..1	1							
2.019 AKA				0..10		0..10							
2.020 POB				0..1		1							
2.021 CTZ				0..10		0..10							
2.022 DOB	1	0..1	1	0..5		1..5							
2.024 SEX				0..1		1							
2.025 RAC				0..1		1							
2.026 SMT				0..10		0..10							
2.027 HGT				0..1		1							
2.029 WGT				0..1		1							
2.031 EYE				0..1		1							
2.032 HAI				0..1		1							
2.034 PAT													
2.035 PPA													
2.038 DPR				0..1									
2.039 EAD													
2.045 DOA						1							
2.046 DOS													
2.047 ASL						1..999							

[1] DPR must be included if fingerprints are included.
[2] Subfields CDD and CCT are mandatory fields for this TOT.

Table I-1 Summary of Field Lists for Data Management Transactions
(Minimum/Maximum Occurrences of Each Element for Each Logical Record Type)

Tag Element	RBSR	RBMNT	RBMNTR	SPMNT	SPMNTR	SRNR	SRNRR	ULD	ULDR	XACT	XACTR	XMNT	XMNTR
2.051 CSL						0..999							
2.054 SSD						1							
2.055 SLE													
2.059 SRF													
2.060 MSG	0..10		0..11		0..11					0..1			
2.062 IMT													
2.070 RAP													
2.071 ACN													
2.072 FIU													
2.073 CRI	0..3	0..3	0..3	0..3	0..3	1..3	1..3	0..3	0..3				
2.074 FGP													
2.075 ERS	0..1		0..1				1						
2.080 EXP													
2.082 REC													
2.084 AMP													
2.086 SCNA								1	1				
2.098 NDR				1									
2.2015 RBXD	1	0..1	1										
2.2020 RBR	0..9	0..9	0..9										
2.2021 IFS													
2.2029 BSI													
2.2034 ULR													
2.2035 EVI	0..1			0..1									
2.2037 ESI										1	1	1	1
2.2039 RBMI		1											
2.2040 RBT	1..40	0..40	1..40										
2.2046 TLI				0..1									
2.2048 RBSI	1	1	1										
2.2049 RBTD	0..1		0..1										

[1] DPR must be included if fingerprints are included.
[2] Subfields CDD and CCT are mandatory fields for this TOT.

Table I-1 Summary of Field Lists for Data Management Transactions
(Minimum/Maximum Occurrences of Each Element for Each Logical Record Type)

Tag Element	RBSR	RBMNT	RBMNTR	SPMNT	SPMNTR	SRNR	SRNRR	ULD	ULDR	XACT	XACTR	XMNT	XMNTR
2.2051 HNOTI				0..1									
2.2052 MAI				1	1							1	1
2.2054 RBSD	1		1										
2.2061 BIE					0..61								
2.2062 RBNF	1	0..1	1										
2.2063 RBOO	1	0..1	1										
2.2064 RBUD	0..10	0..10	0..10										
2.2065 RBC	1												
2.2067 RBDI	0..1	0..1	1										
2.2070 RBATN	0..1	0..1	0..1										
2.2071 RBST	0..1		0..1										
2.2072 POC				0..1									
2.2100 SED						1							
2.2101 SST						1..8							
2.2102 RSC						0..1							
2.2103 STT						0..1							
2.2104 SRA						1							

[1] DPR must be included if fingerprints are included.
[2] Subfields CDD and CCT are mandatory fields for this TOT.

Appendix J: Descriptors And Field Edit Specifications For Type-9 Logical Records

Appendix J provides the field specifications for submitting or receiving a Type-9 Image Feature record with a Latent Friction Ridge Features Search (LFFS) or Search Results - Latent (SRL) transaction respectively.

Refer to the ANSI/NIST-ITL for complete Type-9 field usage and descriptions. The following subsections lay out in alphabetical order the complete definition of fields used by NGI while processing a Type-9 feature set record.

NGI will allow for both the preferred Extended Feature Set (EFS) and the legacy-only FBI IAFIS Feature Set. The Extended Feature Set allows the user to take advantage of the additional latent search capabilities (palm and supplemental searching, returning matched features, etc.) delivered with NGI Increment 3, and should be used for all new implementations of latent examination workstations that will interface with FBI/CJIS. When both sets are present, NGI will use the EFS. When features are being returned, NGI will place those features in the EFS fields only.

Type-9 Data Dictionary

The Type-9 Data Dictionary for this appendix only includes those fields that have been constrained by NGI/CJIS functionality. All other fields defined in the ANSI/NIST-ITL will be used as defined in that standard.

1) Extended Feature Set Fields

The following list of fields are those used by NGI in the Extended Feature Set (EFS). EFS is the preferred method of transmitting minutiae information to NGI.

COM 9.351 EFS Comments
COR 9.320 EFS Cores
CPF 9.361 EFS Corresponding Points or Features
DEL 9.321 EFS Deltas
FPP 9.302 EFS Finger-Palm-Plantar Position
FQM 9.316 EFS Friction Ridge Quality Metric
FSP 9.303 EFS Feature Set Profile
MIN 9.331 EFS Minutiae
MFD 9.350 EFS Method of Feature Detection
ORT 9.301 EFS Orientation
PAT 9.307 EFS Pattern Classification
ROI 9.300 EFS Region of Interest
RRC 9.363 EFS Relative Rotation of Corresponding Print

The usage for each field is applicable when the EFS section is intended to represent the template.

Tables 42 and 43 below summarize all the allowed EFS fields in the Type-9 record in the traditional encoding format. The field sizes do not account for any separator characters.

Table 42 Type-9 EFS Fields Utilized by NGI for Matching

Field	Code	Name	Usage	Comment
ROI	9.300	Region of Interest	Mandatory	Defines where the area within or bounds of the latent image containing the feature data has been specified.
ORT	9.301	Orientation	Optional	If absent, this means print is assumed to be upright ±15°; orientation must be indicated otherwise.
FPP	9.302	Finger/Palm Position	Mandatory	Indicates the source of friction ridge skin (finger or palm); value may be “unknown”
FSP	9.303	Feature Set Profile	Mandatory	This field is used to designate the profile (level of markup) of the type-9 features. The recommended profile is “2” for Quick Minutiae Search.
PAT	9.307	Pattern Classification	Optional	This field is used to specify one or more general pattern classification codes to which the fingerprint may match. Any combinations up to all four possible values are allowed (specifying all four is equivalent to no value and implies “unknown”).

Field	Code	Name	Usage	Comment
COR	9.320	Cores	Optional	All cores must be marked if present in fingerprint images. (Core-like structures in palms may optionally be marked)
DEL	9.321	Deltas	Optional	All deltas must be marked if present in fingerprint images (Delta-like structures in palms may optionally be marked)
MIN	9.331	Minutiae	Optional	All minutiae must be marked if present in the image

Table 43 Type-9 EFS Fields Populated by NGI in an EBTS Response

Field	Code	Name	Usage	Comment
ROI	9.300	Region of Interest	Mandatory	The ROI provided as part of original template submission, the area within or the bounds of the image from which the features were extracted.
ORT	9.301	Orientation	Optional	If absent, this means print is assumed to be upright ±15°; orientation must be indicated otherwise.
FPP	9.302	Finger/Palm Position	Mandatory	Indicates the source of friction ridge skin (finger or palm); value may be "unknown"
FSP	9.303	Feature Set Profile	Mandatory	This field is used to designate the profile (level of markup) of the type-9 features. All NGI responses will contain "30" for All and Corresponding Minutiae.
PAT	9.307	Pattern Classification	Optional	The classification specified as part of original template or that determined by the encoder; may be "UC" (unable to classify)
FQM	9.316	Friction Ridge Quality Metric	Optional	Quality specified on original template submission or the quality computed by the encoder
COR	9.320	Cores	Optional	Any identified cores will be marked; only for fingerprint images.
DEL	9.321	Deltas	Optional	Any identified deltas will be marked; only for fingerprint images.
MIN	9.331	Minutiae	Mandatory	All identified minutiae will be marked. Note this field contains ALL minutiae from the original template.
MFD	9.350	Method of Feature Detection	Optional	The NGI LFR encoder designation if template was created by that algorithm or not given otherwise (externally created)
COM	9.351	Comment	Optional	Additional information that describes the extractor if this template was automatically generated from image.
CPF	9.361	Corresponding Points or Features	Optional	Matching Features between probe and candidate when requested. The Type Of Correspondence (TOC) to be provided for NGI is 'F' (Feature). Note this field contains the labeled feature that definitely corresponds to the specific feature defined by the Field Number and the Field Occurrence information items.
RRC	9.363	EFS Relative Rotation of Corresponding Print	Optional	This field is used when returning search results with Type-9s to indicate the overall rotation of the probe (or target) print that resulted in the match score with the candidate.

2) FBI IAFIS Feature Set Fields (Legacy Only)

The following list of fields represent the Legacy FBI IAFIS Feature Set. These fields are supported for backward compatibility for legacy users with LFFS searches of fingerprint (FGP 0-10) features only.

APC 9.017 AFIS/FBI Pattern Classification

This field contains one to three subfields. For traditional encoding, these fields will be separated by the {RS} separator with each subfield composed of three information items separated by the {US} separator character. Each subfield reports a possible basic pattern class (APAT) and the ridge counts (RCN1, RCN2) defining its subpattern class. The AFIS/FBI automatic classifier recognizes only four basic pattern classes: arch (AU), left slant loop (LS), right slant loop (RS), and whorl (WU). It further subdivides the basic pattern classes of loops and whorls according to the count of ridges crossed or touched along a straight line joining the core(s) to the delta(s). The count is one more than the number of intervening ridges. For latents, the latent examiner is expected to make a best estimate as opposed to a range. AFIS/FBI treats all indicated pattern classes equally (i.e., no significance given to the order of the possible classes provided). AFIS/FBI will apply a suitable tolerance to the specified ridge count for search space penetration.

The tagged field accommodates a primary pattern and up to two reference patterns in the one-to-three subfields. The first information item of a subfield contains the two-character symbol for the pattern being designated. The second and third information items contain the appropriate subpattern class ridge count between the core(s) and the delta(s) with permissible values of 1 to 30 for actual ridge counts. For traditional encoding, a zero (0) should be entered if a ridge count is not appropriate; a thirty-one (31) if it was appropriate but not counted or indeterminate. Both information fields in the traditional encoding are zero for an arch, the second information item in a subfield should be zero if the pattern for the subfield is a loop, and neither information item should be zero for a whorl. If a whorl is indicated in pattern classification, the second information item (RCN1) of a subfield contains the ridge count from the left delta to the downward opening core, and the third information item (RCN2) contains the ridge count from the right delta to the upward opening core. This implies that a central pocket whorl will have both a downward and an upward opening (directed) core generally aligned along the major axis of the innermost ellipse. If the automatic or manual classifier indicates all four basic patterns are possible, then the fingerprint should be designated as “fully referenced” by providing only one subfield with the first information item “UC”; the second and third information items should both be “31.” If a particular fingerprint was not characterized for a tenprint traditional mode search request, no Type-9 logical record should be submitted for that finger position, and the classification code for the missing finger must be placed in the Type-2 pattern class field.

Table 44 FCP Values Table

Description	First Information Item	Second Information Item	Third Information Item
Arch (type not designated)	AU	0	0
Left slant loop	LS	1 – 31	0
Right slant loop	RS	1 – 31	0
Whorl (type not designated)	WU	1 – 31	1 - 31
Complete scar	SR	0	0
Amputation	XX	0	0
Unable to classify	UC	0 or 31	0 or 31

CHQ 9.024 Characterization Quality

This is a single information item field of three numeric characters with the possible value of 1 to 254. Within AFIS/FBI, the principal quality parameter is the "Equivalent Number of Minutiae." The distribution of the parameter over thousands of fingerprints approximates a Gaussian distribution with a mean of about 50 and a standard deviation of about 12. The equivalent number of minutiae is calculated as the sum of the weighted normalized quality with the weighting being the number of qualified neighbors for the minutiae divided by the maximum number of neighbors (eight). The normalized minutiae quality ranges from unity (best) to zero (worst). A qualified neighbor would be another minutia with a reliable separating ridge count (less than 14) and within a reliable distance (not more than 1/5 inch).

CLQ 9.025 Classifier Quality

This is a single information item field of seven characters representing a positive real number between one (1.0000) and 99 (99.9999) indicating the quality or confidence of the automatic classification. The presence of the information item may reduce the AFIS/FBI processing load, but its absence will not degrade AFIS/FBI performance. A value of 1.0000 indicates best possible quality or confidence; increasing values indicate progressively worse quality or confidence. The information item format shall be XX.YYYY in which XX represents the integer portion and YYYY the fractional portion to four decimal places with a decimal point (period) between.

COF 9.019 Coordinate Offsets

This field allows the recording of translation, rotation, and image cropping employed in the characterization process to allow the examiner or an analyst to overlay onto the original or intermediate image the features reported in this record. The field contains five eight-character information items. For traditional encoding, each item will be separated by the {US} separator. Unused information items may be empty, but the {US} separators must be included.

For AFIS/FBI, the units are in original image pixels and degrees using standard image processing coordinates; that is, (0,0) origin at the upper left, column index increasing from left to right, and row index increasing from top to bottom. For the traditional encoding, the column and row coordinate indexes (XYP) shall be coded as a single eight-digit integer number composed of a four-digit column coordinate (X) connected to a four-digit row coordinate (Y) using a format of XXXXYYYY. A minus sign is permitted in the leftmost digit of a four-digit group.

The five information items are:

1. The offset to the upper left corner of a non-rotated sub-image used subsequently in image processing
2. The coordinates of the center of rotation within the sub-image about which the sub-image is rotated
3. The clockwise rotation angle (THET) in ten-thousandths of a degree resolution (e.g.,

072.2342) including the decimal point
4. The coordinates of the center of rotation in the rotated sub-image after the sub-image has been translated to eliminate negative column and row indexes
5. The upper-left-corner column and row offsets to a cropped sub-image taken from the rotated image once adjusted to eliminate negative coordinate values

CRA 9.021 Core(s) Attribute

This field is for cores that can be perceived in the fingerprint (both tenprint and latent). If there is no core perceived in the fingerprint image, the tagged field should be omitted. This field contains up to two subfields (one subfield for each core). For traditional encoding, the subfields will be separated by the {RS} separator. Each subfield contains three information items representing the attributes of each core. For traditional encoding, these information items will be separated by the {US} separator.

The first information item of a subfield contains the X and Y coordinate position of the core (XYM). The position shall be established either automatically or manually according to the definitions presented in The Science of Fingerprints. The X and Y values shall be coded as a single eight-digit integer number composed of the four-digit X coordinate (column) followed by the four-digit Y coordinate (row) using a format of XXXXYYYY. The X coordinate and Y coordinate are in units of 10 micrometers with the origin at the upper left. Core positions shall be in the same coordinate system as the minutiae.
The second information item of a subfield is of three digit size and contains the direction of the core in integer degrees (DID). The direction is that of the core opening through the center of curvature for the innermost recurve at maximum curvature. The direction angle is positive counterclockwise from the reference horizontal to the right. Direction angles shall be reported between “001” and “360” degrees only. The value “000” shall be reserved for “direction not provided” while “360” shall be equivalent to zero degrees.
The third information item of a subfield is of four digit size representing the radius of position uncertainty (PUM) in the manual or automatic placement of the core in integer units of 10 micrometers.

DLA 9.022 Delta(s) Attributes

This field is for deltas that can be perceived in the fingerprint for both AFIS/FBI latent and tenprint characterizations. If there is no delta perceived in the fingerprint image, the tagged field should be omitted. This field contains up to two subfields (one subfield for each delta). For traditional encoding, these subfields will be separated by the {RS} separator. Each subfield contains five information items representing the attributes of each delta. For traditional encoding, these information items will be separated by the {US} separator.

- The first information item of a subfield consists of eight characters and contains the X and Y coordinate position (XYM) of the delta(s). The position shall be established either automatically or manually according to the definitions presented in The Science of Fingerprints. The X and Y values shall be coded as a single eight-digit integer number composed

of the four-digit X coordinate (column) followed by the four-digit Y coordinate (row) using a format of XXXXYYYY. The X coordinate and Y coordinate are in units of 10 micrometers with the origin at the upper left.

The next three information items of a subfield shall be of three-digit size each to contain the three directions of ridge flow (DID) outward from the delta in integer degrees.

- The second information item of a subfield is the direction of the ridge flow upward from the delta.
- The third information item of a subfield shall be the direction of ridge flow outward from the delta and to the left.
- The fourth information item shall be the direction of the ridge flow outward from the delta to the right. The direction angles are positive counterclockwise from the reference horizontal to the right. Direction angles shall be reported between “001” and “360” degrees only. The value “000” shall be reserved for “direction not provided” while “360” shall be equivalent to zero degrees.
- The fifth subfield of four-digit size represents the radius of position uncertainty (PUM) in the manual or automatic placement of the delta in integer units of 10 micrometers.

FCP 9.016 Fingerprint Characterization Process

This field of three information items identifies the characterization equipment and the amount of manual intervention employed in the characterization process. For traditional encoding, the three information items shall be separated by the {US} separator.

- The first information item shall contain the name of the organization (VEN) providing the automatic process software.
- The second information item shall be a vendor-supplied, alphanumeric character pair (VID) representing the model and/or version of the automatic process.
- The third information item (MET) shall be an ordered sequence of three characters selected from the following list indicating the degree of automation in the characterization process.

Table 45 MET Values Table

Description	Code
First (leftmost) character (classification):	
Automatic pattern classification without manual intervention	C
Manually initiated or verified pattern classification	N
Second (middle) character (minutiae generation):	
Minutiae automatically generated, no manual editing or verification	A
Minutiae automatically generated, examiner verified or edited	E
Minutiae manually generated by examiner	M
Third (rightmost) character (ridge count):	
Automatic, synthesized ridge count without manual verification	S
Automatic, actual ridge count without manual verification	T
Automatic ridge count any method, examiner edited or verified	V

FGN 9.014 Finger Number

This AFIS/FBI two-byte field shall contain a character designating the finger position that produced the information in this Type-9 record. If the exact finger position cannot be determined, "00" shall be entered. Multiple codes are not permitted. Possible finger positions for single latent characterizations are specified in the accompanying Type-2 logical record. If multiple latents from the same person are transmitted, the particular finger position corresponding to the Type-9 record must be identified within the Type-9 record.

Allowable codes are as follows:

Table 46 Finger Number Table

Finger Position	Code
Unknown finger	00
Right thumb	01
Right index	02
Right middle	03
Right ring	04
Right little	05
Left thumb	06
Left index	07
Left middle	08
Left ring	09
Left little	10

MAT 9.023 Minutiae and Ridge Count Data

This AFIS/FBI field shall contain all of the individual minutiae and ridge count data associated with the current fingerprint impression. It shall be composed of as many subfields as there are minutiae stated in the minutiae count in the tagged field 9.015, NMN. Each subfield shall be devoted to a single minutia and shall consist of multiple information items. For traditional encoding, subfields shall be separated by the separator character and all information items within a subfield shall be separated by the separator character. The minutiae shall be indexed from one to NMN and need not be ordered according to any particular attribute. The first two information items are required, and the others allow AFIS/FBI to achieve best possible candidate list performance. An information item may be omitted, but its separator character must remain, except all ridge count data must be present with special values designating missing or omitted data.

<u>Index number (MDX):</u> The first information item shall be the index number, which shall be initialized to one and incremented by one for each additional minutia in the fingerprint. This index number serves to identify each individual minutia.

<u>X, Y, and theta values (XYT):</u> The X and Y coordinates are values ranging from zero upward, and the theta direction value, between 000 and 360, shall comprise the second required information item. These three values shall be coded and recorded as a single 11-digit integer number corresponding

to the connected X, Y, and theta values, in that order. If the minutia is of Type D, the theta value shall be recorded as "000." The origin of the coordinate system shall be the upper left corner of the image with X increasing to the right and Y increasing downward.

The coordinate system units shall be units of 0.01mm (10 micrometers). The direction of an ending shall be into the ending ridge and the direction of a bifurcation shall be into the white space created by the dividing ridge. Angles shall be in integer degrees measured positive counterclockwise from a reference horizontal and to the right. The XY coordinates shall be applied after all rotation and translation of the image has been accomplished.

Quality measure (QMS): If present, the third information item is the minutiae quality measure. The two-digit values shall range from 0 to 63. The value zero shall indicate a manually encoded minutia. The value "1" shall indicate that no method of indicating a confidence level is available. Values between 2 and 63 shall indicate decreasing levels of confidence, with 2 denoting the greatest confidence.

Minutiae type designation (MNT): The fourth information item is the minutiae type designation. This shall be a single character chosen as follows.

Table 47 MNT Values Table

Description	Type
Ridge ending	A
Ridge bifurcation	B
Ridge ending or bifurcation, no distinction provided	C
Type other than ending or bifurcation	D

Ridge count data (MRO): The fifth information item is the ridge count data for the nearest neighboring minutia of the indexed minutia. It shall be formatted as a series of eight sub-items, each consisting of a minutiae index number and a ridge count. This information shall be conveyed by combining the identity (MDX) of the neighboring minutia and the ridge count to that of neighboring minutiae into a five digit number. For AFIS/FBI, the minutiae identification index (MDX) shall increase from 1 to 254. The ridge count values (one more than number of intervening ridges) shall range from 0 to 15; with 14 indicating a count greater than 13, and 15 indicating an indeterminate count. Up to eight neighboring minutiae can be recorded, each being the nearest neighbor in an angular sector of 45 degrees (octant) with the zero-th octant centered (+/- 22.5 degrees) and aligned with the direction of the minutiae and increasing in octant index in the counterclockwise direction. If a minutia does not have a neighbor in a particular octant, the value "25515" should be used for the sub-item in traditional encoding.

Octant residuals (RSO): The last information item of eight ASCII characters indicates into which half of the octant each neighboring minutia lies. This subfield is beneficial for performance but not mandatory. The characters are ordered left to right according to the ascending octant index. The corresponding character shall be 1 if the neighboring minutia lies in the counterclockwise half of the octant. The corresponding character shall be 0 if the neighboring minutia lies in the clockwise half of the octant or if there is no neighboring minutiae in the octant.

NMN 9.015 Number of Minutiae

This AFIS/FBI field shall contain the count of the number of minutiae recorded for this fingerprint. For AFIS/FBI, the number should not exceed 254. If the number of minutiae provided in this field exceeds the number of minutiae the system can accommodate, the list will be truncated according to the reported minutiae quality. Minutiae below the proximal crease generally are not included.

ORN 9.020 Orientation Uncertainty

The orientation uncertainty is a substantial contribution for AFIS/FBI latent fingerprint characterizations and is not used for tenprint searches. This one-to-three-character mandatory field contains an estimate of the deviation in degrees of the latent image (after rotation and translation to support editing and characterization) relative to fingertip up. The entry shall be the absolute value of the angular deviation from "tip-up." The uncertainty would be zero if the impression were made with the extended finger aligned with the vertical of the displayed image. It is expected to be a human visual estimate of "the final image is aligned tip up within about X-degrees." If the examiner can not provide an estimate, the value shall be 180 (unoriented).

ROV 9.018 Region of Value

This is a field of three to twenty subfields separated by the {RS} separator defining the vertices of a polygon that bounds the region of the image from which the characterization products have been extracted. For traditional encoding, each eight-character subfield consists of the combination of the row and column coordinates (XYM), with the first four digits representing the column and the second four digits representing the row in the XXXXYYYY structure. For traditional encoding, the subfields will be separated by the {RS} separator.

Appendix K: Descriptors And Field Edit Specifications For Type-10 Logical Records

Type-10 records shall contain facial and/or SMT image data and related ASCII information pertaining to the specific image contained in this record. It shall be used to exchange both grayscale and color image data in a compressed or uncompressed form. As NGI will be accepting images as defined in the ANSI/NIST-ITL, refer to the ANSI/NIST-ITL for complete usage and descriptions of the Type-10 fields. The Data Dictionary in this appendix has been organized to display Identifier, Field Number, Field Name, and Field Description.

Type-10 Data Dictionary

The T-10 Data Dictionary for this appendix only includes those fields that have been constrained by NGI/CJIS functionality. All other fields defined in the ANSI/NIST-ITL will be used as defined in that standard.

In addition to these required fields, users are strongly encouraged to populate the additional SMT descriptors SMT Size (10.042 SMS) and Tattoo Colors (10.043 COL) as applicable, to facilitate subsequent searches of their enrolled SMT images.

IMT 10.003 Image Type

This mandatory field shall be used to indicate the type of image contained in this record and is restricted to 'FACE', 'SCAR', 'MARK' and 'TATTOO' for use when enrolling into NGI.

CGA 10.011 Compression Algorithm

This is a mandatory field containing the compression algorithm for Type-10 records. When a Type-10 record contains a facial image, the JPEGB value shall be used in this field.

SMT 10.040 NCIC SMT Code

This field is mandatory when field 10.003, Image Type (IMT) = 'SCAR', 'MARK', or 'TATTOO'. It is used to identify a general location of the captured scar, mark, tattoo, or other characteristic (including piercings) in an image. The contents of this field shall be from the NCIC code (See Annex D of the ANSI/NIST-ITL). The captured image may encompass an area larger than that specified by a single NCIC body part code for the particular image type. This situation may be accommodated by listing multiple NCIC codes, each in a separate subfield. In this case the primary code is listed first. There need not be more than one subfield.

SMD 10.042 SMT Descriptors

The SMD field is mandatory when field 10.003, Image Type (IMT) = 'SCAR', 'MARK', or 'TATTOO'. SMD is used to describe the content of the SMT image to an extent greater than documented in Field 10.040: NCIC SMT code / SMT, and as such, will support the efficacy of the NGI text-based SMT search (TXTSRCH). Please reference the ANSI/NIST-ITL description of SMD for details on the definition and use of this field.

Appendix L: Summary Tables

Appendix L contains summary tables that collect information otherwise dispersed through the EBTS document. Table L-1 cross-references all EBTS elements that are currently used with Element IDs and Tag Numbers.

Tables L-2 and L-3 list record set requirements for each EBTS transaction type. Table L-2 lists the record set requirements for each type of submission. Table L-3 lists record set requirements for each response type. In instances where these requirements differ depending upon which submission the response is made for, several entries will be present.

Table L-4 shows the correlation of EBTS TOTs to their responses, including error responses.

Table L-1 Complete Element Cross-Reference List by Tag Number

EBTS Tag Number	Element ID	Element Name
1.001	LEN	LOGICAL RECORD LENGTH
1.002	VER	VERSION
1.003	CNT	FILE CONTENT
1.004	TOT	TYPE OF TRANSACTION
1.005	DAT	DATE
1.006	PRY	TRANSACTION PRIORITY
1.007	DAI	DESTINATION AGENCY IDENTIFIER
1.008	ORI	ORIGINATING AGENCY IDENTIFIER
1.009	TCN	TRANSACTION CONTROL NUMBER
1.010	TCR	TRANSACTION CONTROL REFERENCE
1.011	NSR	NATIVE SCANNING RESOLUTION
1.012	NTR	NOMINAL TRANSMITTING RESOLUTION
1.013	DOM	DOMAIN NAME
1.014	GMT	GREENWICH MEAN TIME
1.015	DCS	DIRECTORY OF CHARACTER SETS
1.016	APS	APPLICATION PROFILE SPECIFICATIONS
1.017	ANM	AGENCY NAMES
2.001	LEN	LOGICAL RECORD LENGTH
2.002	IDC	INFORMATION DESIGNATION CHARACTER
2.003	FFN	FBI FILE NUMBER
2.005	RET	RETENTION CODE
2.006	ATN	ATTENTION INDICATOR
2.007	SCO	SEND COPY TO
2.009	OCA	ORIGINATING AGENCY CASE NUMBER
2.010	CIN	CONTRIBUTOR CASE IDENTIFIER NUMBER
2.011	CIX	CONTRIBUTOR CASE IDENTIFIER EXTENSION
2.012	LCN	FBI LATENT CASE NUMBER
2.013	LCX	LATENT CASE NUMBER EXTENSION
2.014	FBI	FBI NUMBER/UNIVERSAL CONTROL NUMBER
2.015	SID	STATE IDENTIFICATION NUMBER
2.016	SOC	SOCIAL SECURITY ACCOUNT NUMBER
2.017	MNU	MISCELLANEOUS IDENTIFICATION NUMBER
2.018	NAM	NAME
2.019	AKA	ALIASES
2.020	POB	PLACE OF BIRTH
2.021	CTZ	COUNTRY OF CITIZENSHIP
2.022	DOB	DATE OF BIRTH
2.023	AGR	AGE RANGE
2.024	SEX	SEX
2.025	RAC	RACE
2.026	SMT	SCARS, MARKS, AND TATTOOS
2.027	HGT	HEIGHT
2.028	HTR	HEIGHT RANGE

Table L-1 Complete Element Cross-Reference List by Tag Number

EBTS Tag Number	Element ID	Element Name
2.029	WGT	WEIGHT
2.030	WTR	WEIGHT RANGE
2.031	EYE	EYE COLOR
2.032	HAI	HAIR COLOR
2.033	FPC	NCIC FINGERPRINT CLASSIFICATION
2.034	PAT	PATTERN LEVEL CLASSIFICATIONS
2.035	PPA	PALM PRINTS AVAILABLE INDICATOR
2.036	PHT	PHOTO INDICATOR AVILABLE
2.037	RFP	REASON FINGERPRINTED
2.038	DPR	DATE PRINTED
2.039	EAD	EMPLOYER AND ADDRESS
2.040	OCP	OCCUPATION
2.041	RES	RESIDENCE OF PERSON FINGERPRINTED
2.042	MIL	MILITARY CODE
2.043	TSR	TYPE OF SEARCH REQUESTED
2.044	GEO	GEOGRAPHICAL AREA OF SEARCH
2.045	DOA	DATE OF ARREST
2.046	DOS	DATE OF ARREST - SUFFIX
2.047	ASL	ARREST SEGMENT LITERAL
2.051	CSL	COURT SEGMENT LITERAL
2.053	OFC	OFFENSE CATEGORY
2.054	SSD	CUSTODY OR SUPERVISORY STATUS - START DATE
2.055	SLE	CUSTODY OR SUPERVISORY STATUS LITERAL
2.056	ICO	IDENTIFICATION COMMENTS
2.057	FNR	FINGER NUMBER(S) REQUESTED
2.059	SRF	SEARCH RESULTS FINDINGS
2.060	MSG	STATUS/ERROR MESSAGE
2.061	CST	CASE TITLE
2.062	IMT	IMAGE TYPE
2.064	CAN	CANDIDATE LIST
2.065	RSR	REPOSITORY STATISTICS RESPONSE
2.067	IMA	IMAGE CAPTURE EQUIPMENT
2.070	RAP	REQUEST FOR ELECTRONIC RAP SHEET
2.071	ACN	ACTION TO BE TAKEN
2.072	FIU	FINGERPRINT IMAGE(S) UPDATED
2.073	CRI	CONTROLLING AGENCY IDENTIFIER
2.074	FGP	FRICTION RIDGE GENERALIZED POSITION
2.075	ERS	ELECTRONIC RAP SHEET
2.078	PEN	PENETRATION QUERY RESPONSE
2.079	NCR	NUMBER OF CANDIDATES' IMAGES RETURNED
2.080	EXP	RESPONSE EXPLANATION
2.082	REC	RESPONSE CODE
2.083	ULF	UNSOLVED BIOMETRIC FILE

Table L-1 Complete Element Cross-Reference List by Tag Number

EBTS Tag Number	Element ID	Element Name
2.084	AMP	AMPUTATED OR BANDAGED
2.086	SCNA	SUBJECT CONTROL NUMBER
2.087	TAA	TREAT AS ADULT
2.088	NOT	NOTE FIELD
2.089	MSC	MATCHSCORE
2.091	RCD1	RIDGE CORE DELTA ONE FOR SUBPATTERN CLASSIFICATION
2.092	RCD2	RIDGE CORE DELTA TWO FOR SUBPATTERN CLASSIFICATION
2.095	RFR	REQUEST FEATURES RECORD
2.096	RPR	REQUEST PHOTO RECORD
2.098	NDR	NAME OF DESIGNATED REPOSITORY
2.2007	SDOB	SUBMITTED DATE OF BIRTH
2.2008	SNAM	SUBMITTED NAME
2.2010	NIR	NUMBER OF IMAGES REQUESTED
2.2015	RBXD	RAP BACK EXPIRATION DATE
2.2016	DNAF	DNA FLAG (Future Capability)
2.2017	DORI	DNA LOCATION (Future Capability)
2.2018	DNAC	DNA IN CODIS FLAG
2.2020	RBR	RAP BACK RECIPIENT
2.2021	IFS	IDENTIFICATION FIREARMS SALES
2.2022	CIDN	CONTRIBUTOR ASSIGNED IDENTIFICATION NUMBER
2.2023	SII	SUPPLEMENTARY IDENTITY INFORMATION
2.2024	HTI	HIT TYPE INDICATOR
2.2028	BID	BIOMETRIC IMAGE DESCRIPTION
2.2029	BSI	BIOMETRIC SET IDENTIFIER
2.2030	PPD	PRINT POSITION DESCRIPTOR
2.2031	BIA	BIOMETRIC IMAGE AVAILABLE
2.2032	ATR	AUDIT TRAIL RECORD
2.2033	CNL	CANDIDATE INVESTIGATIVE LIST
2.2034	ULR	UNSOLVED LATENT RETAINED
2.2035	EVI	EVENT IDENTIFIER
2.2036	POS	SUBJECT POSE
2.2037	ESI	EXTERNAL SUBJECT IDENTIFIER
2.2039	RBMI	RAP BACK MAINTENANCE INDICATOR
2.2040	RBT	RAP BACK TRIGGER
2.2041	RBNI	RAP BACK ACTIVITY NOTIFICATION INDICATOR
2.2046	TLI	TIER LEVEL INDICATOR
2.2047	RAR	RETURN ALL RECORDS INDICATOR
2.2048	RBSI	RAP BACK SUBSCRIPTION IDENTIFIER
2.2049	RBTD	RAP BACK TERM DATE
2.2050	RBSL	RAP BACK SUBSCRIPTION LIST
2.2051	HNOTI	HIT NOTIFICATION INDICATOR
2.2052	MAI	MAINTENANCE ACTION INDICATOR
2.2054	RBSD	RAP BACK SUBSCRIPTION DATE

Table L-1 Complete Element Cross-Reference List by Tag Number

EBTS Tag Number	Element ID	Element Name
2.2055	SMS	SMT SIZE
2.2058	SMD	SMT DESCRIPTOR
2.2059	TCL	TATTOO COLOR
2.2061	BIE	BIOMETRIC IMAGE ENROLLMENT
2.2062	RBNF	RAP BACK ACTIVITY NOTIFICATION FORMAT
2.2063	RBOO	RAP BACK OPT OUT IN-STATE INDICATOR
2.2064	RBUD	RAP BACK USER DEFINED
2.2065	RBC	RAP BACK CATEGORY
2.2067	RBDI	RAP BACK DISCLOSURE INDICATOR
2.2068	DTR	DATE RANGE
2.2069	RBTED	RAP BACK TRIGGERING EVENT DETAILS
2.2070	RBATN	RAP BACK ATTENTION INDICATOR
2.2071	RBST	RAP BACK SUBSCRIPTION TERM
2.2072	POC	POINT OF CONTACT
2.2073	BIL	BIOMETRIC IMAGE LIST
2.2100	SED	CUSTODY OR SUPERVISORY STATUS END DATE
2.2101	SST	SUPERVISED STATUS TYPE
2.2102	RSC	REASON SUPERVISION CANCELLED
2.2103	STT	SUPERVION TRANSFERRED TO
2.2104	SRA	SUPERVISED RELEASE ACTION
4.001	LEN	LOGICAL RECORD LENGTH
4.002	IDC	INFORMATION DESIGNATION CHARACTER
4.003	IMP	IMPRESSION TYPE
4.004	FGP	FRICTION RIDGE GENERALIZED POSITION
4.005	ISR	IMAGE SCANNING RESOLUTION
4.006	HLL	HORIZONTAL LINE LENGTH
4.007	VLL	VERTICAL LINE LENGTH
4.008	GCA	COMPRESSION ALGORITHM
4.009	IMG	IMAGE DATA
7.001	LEN	LOGICAL RECORD LENGTH
7.002	IDC	INFORMATION DESIGNATION CHARACTER
7.003	IMP	IMPRESSION TYPE
7.004	FGP	FINGER POSITION
7.005	ISR	IMAGE SCANNING RESOLUTION
7.006	HLL	HORIZONTAL LINE LENGTH
7.007	VLL	VERTICAL LINE LENGTH
7.008	GCA	GRAYSCALE COMPRESSION ALGORITHM
7.009	IMG	IMAGE DATA
9.001	LEN	LOGICAL RECORD LENGTH
9.002	IDC	INFORMATION DESIGNATION CHARACTER
9.003	IMP	IMPRESSION TYPE
9.004	FMT	MINUTIAE FORMAT
9.014	FGN	FINGER NUMBER

Table L-1 Complete Element Cross-Reference List by Tag Number

EBTS Tag Number	Element ID	Element Name
9.015	NMN	NUMBER OF MINUTIAE
9.016	FCP	FINGERPRINT CHARACTERIZATION PROCESS
9.017	APC	AFIS/FBI PATTERN CLASSIFICATION
9.018	ROV	REGION OF VALUE
9.019	COF	COORDINATE OFFSETS
9.020	ORN	ORIENTATION UNCERTAINTY
9.021	CRA	CORE ATTRIBUTES
9.022	DLA	DELTA ATTRIBUTES
9.023	MAT	MINUTIAE AND RIDGE COUNT DATA
9.024	CHQ	CHARACTERIZATION QUALITY
9.025	CLQ	CLASSIFIER QUALITY
9.026 - 9.030	RSV	RESERVED FOR FBI IAFIS FEATURE SET
9.031 - 9.055	RSV	RESERVED FOR COGENT FEATURE SET
9.056 - 9.070	RSV	RESERVED FOR MOTOROLA FEATURE SET
9.071 - 9.099	RSV	RESERVED FOR SAGEM MORPPHO FEATURE SET
9.100 - 9.125	RSV	RESERVED FOR NEC FEATURE SET
9.125 - 9.150	RSV	RESERVED FOR MI-378 FIELDS
9.151 - 9.175	RSV	RESERVED FOR IDENTIX FEATURE SET
9.176	ODD	OTHER FEATURE SET OWNER OR DEVELOPER
9.177	PAG	OTHER FEATURE SETS - PROCESSING ALGORITHM
9.178	SOD	OTHER VENDOR SETS - SYSTEM OR DEVICE
9.179	DTX	OTHER FEATURE SETS – CONTACT INFORMATION AND DESCRIPTIVE TEXT
9.180 - 9.225	UDF	OTHER FEATURE SETS - USER-DEFINED FIELDS
9.226 - 9.299	RSV	Reserved for future use by ANSI/NIST-ITL
9.300	ROI	REGION OF INTEREST
9.301	ORT	ORIENTATION
9.302	FPP	FINGER, PALM, PLANTAR POSITION
9.303	FSP	FEATURE SET PROFILE
9.304 - 9.306	RSV	Reserved for future use by ANSI/NIST-ITL
9.307	PAT	PATTERN CLASSIFICATION
9.308	RQM	RIDGE QUALITY MAP
9.309	RQF	RIDGE QUALITY MAP FORMAT
9.310	RFM	RIDGE FLOW MAP
9.311	RFF	RIDGE FLOW MAP FORMAT
9.312	RWM	RIDGE WAVELENGTH MAP
9.313	RWF	RIDGE WAVELENGTH MAP FORMAT
9.314	TRV	TONAL REVERSAL
9.315	PLR	POSSIBLE LATERAL REVERSAL
9.316	FQM	FRICTION RIDGE QUALITY METRIC
9.317	PGS	POSSIBLE GROWTH OR SHRINKAGE
9.318 - 9.319	RSV	Reserved for future use by ANSI/NIST-ITL
9.320	COR	CORES
9.321	DEL	DELTAS

Table L-1 Complete Element Cross-Reference List by Tag Number

EBTS Tag Number	Element ID	Element Name
9.322	CDR	CORE-DELTA RIDGE COUNTS
9.323	CPR	CENTER POINT OF REFERENCE
9.324	DIS	DISTINCTIVE FEATURES
9.325	NCOR	NO CORES PRESENT
9.326	NDEL	NO DELTAS PRESENT
9.327	NDIS	NO DISTINCTIVE FEATURES PRESENT
9.328 - 9.330	RSV	Reserved for future use by ANSI/NIST-ITL
9.331	MIN	MINUTIAE
9.332	MRA	MINUTIAE RIDGE COUNT ALGORITHM
9.333	MRC	MINUTIAE RIDGE COUNTS
9.334	NMIN	NO MINUTIA PRESENT
9.335	RCC	RIDGE COUNT CONFIDENCE
9.336 - 9.339	RSV	Reserved for future use by ANSI/NIST-ITL
9.340	DOT	DOTS
9.341	INR	INCIPIENT RIDGES
9.342	CLD	CREASES AND LINEAR DISCONTINUITIES
9.343	REF	RIDGE EDGE FEATURES
9.344	NPOR	NO PORES PRESENT
9.345	POR	PORES
9.346	NDOT	NO DOTS PRESENT
9.347	NINR	NO INCIPIENT RIDGES PRESENT
9.348	NCLD	NO CEASES PRESENT
9.349	NREF	NO RIDGE EDGE FEATURES PRESENT
9.350	MFD	METHOD OF FEATURE DETECTION
9.351	COM	COMMENT
9.352	LPM	LATENT PROCESSING METHOD
9.353	EAA	EXAMINER ANALYSIS ASSESSMENT
9.354	EOF	EVIDENCE OF FRAUD
9.355	LSB	LATENT SUBSTRATE
9.356	LMT	LATENT MATRIX
9.357	LQI	LOCAL QUALITY ISSUES
9.358 - 9.359	RSV	Reserved for future use by ANSI/NIST-ITL
9.360	AOC	AREA OF CORRESPONDENCE
9.361	CPF	CORRESPONDING POINTS OR FEATURES
9.362	ECD	EXAMINER COMPARISON DETERMINATION
9.363	RRC	EFS RELATIVE ROTATION OF CORRESPONDING PRINT
9.364 - 9.371	RSV	Reserved for future use by ANSI/NIST-ITL
9.372	EFS	EFS SKELETONIZED IMAGE
9.373	RPS	RIDGE PATH SEGMENTS
9.374 - 9.399	RSV	Reserved for future use by ANSI/NIST-ITL
9.901	ULA	UNIVERSAL LATENT ANNOTATION
9.902	ANN	ANNOTATION INFORMATION
9.903	DUI	DEVICE UNIQUE IDENTIFIER

Table L-1 Complete Element Cross-Reference List by Tag Number

EBTS Tag Number	Element ID	Element Name
9.904	MMS	MAKE/MODEL/SERIAL NUMBER
10.001	LEN	LOGICAL RECORD LENGTH
10.002	IDC	INFORMATION DESIGNATION CHARACTER
10.003	IMT	IMAGE TYPE
10.004	SRC	SOURCE AGENCY/ORI
10.005	PHD	PHOTO DATE
10.006	HLL	HORIZONTAL LINE LENGTH
10.007	VLL	VERTICAL LINE LENGTH
10.008	SLC	SCALE UNITS
10.009	THPS	TRANSMITTED HORIZONTAL PIXEL SCALE
10.010	TVPS	TRANSMITTED VERTICAL PIXEL SCALE
10.011	CGA	COMPRESSION ALGORITHM
10.012	CSP	COLOR SPACE
10.013	SAP	SUBJECT ACQUISITION PROFILE
10.014	FIP	FACE IMAGE BOUNDING BOX COORDINATES IN FULL IMAGE
10.015	FPFI	FACE IMAGE PATH COORDINATES IN FULL IMAGE
10.016	SHPS	SCAN HORIZONTAL PIXEL SCALE
10.017	SVPS	SCAN VERTICAL PIXEL SCALE
10.018	DIST	DISTORATION
10.019	LAF	LIGHTING ARTFACTS
10.020	POS	SUBJECT POSE
10.021	POA	POSE OFFSET ANGLE
10.022	PXS	PHOTO DESCRIPTION
10.023	PAS	PHOTO ACQUISITION SOURCE
10.024	SQS	SUBJECT QUALITY SCORES
10.025	SPA	SUBJECT POSE ANGLES
10.026	SXS	SUBJECT FACIAL DESCRIPTION
10.027	SEC	SUBJECT EYE COLOR
10.028	SHC	SUBJECT HAIR COLOR
10.029	FFP	2D FACIAL FEATURE POINTS
10.030	DMM	DEVICE MONITORING MODE
10.031	TMC	TIERED MARKUP COLLECTION
10.032	3DF	3D FACIAL FEATURE POINTS
10.033	FEC	FEATURE CONTOURS
10.034 – 10.037	RSV	Reserved for future use by ANSI/NIST-ITL
10.038	COM	COMMENT
10.039	T10	TYPE-10 REFERENCE NUMBER
10.040	SMT	NCIC DESIGNATION CODE
10.041	SMS	SCAR/MARK/TATTOO SIZE
10.042	SMD	SMT DESCRIPTORS
10.043	COL	TATTOO COLORS
10.044	ITX	IMAGE TRANSFORM
10.045	OCC	OCCLUSIONS

Table L-1 Complete Element Cross-Reference List by Tag Number

EBTS Tag Number	Element ID	Element Name
10.046 - 10.199	RSV	Reserved for future use by ANSI/NIST-ITL
10.200-10.900	UDF	USER-DEFINED FIELDS
10.901	RSV	RESERVED FOR FUTURE DEFINITION by ANSI/NIST-ITL only
10.902	ANN	ANNOTATED INFORMATION
10.903	DUI	DEVICE UNIQUE IDENTIFIER
10.904	MMS	MAKE/MODEL/SERIAL NUMBER
10.905 – 10.994	RSV	RESERVED FOR FUTURE DEFINITION by ANSI/NIST-ITL only
10.993	SAN	SOURCE AGENCY NAME
10.995	ASC	ASSOCIATED CONTEXT
10.996	HAS	HASH
10.997	SOR	SOURCE REPRESENTATION
10.998	GEO	GEOGRAPHIC SAMPLE ACQUISITION LOCATION
10.999	DAT	IMAGE DATA
13.001	LEN	LOGICAL RECORD LENGTH
13.002	IDC	INFORMATION DESIGNATION CHARACTER
13.003	IMP	IMPRESSION TYPE
13.004	SRC	SOURCE AGENCY/ORI
13.005	LCD	LATENT CAPTURE DATE
13.006	HLL	HORIZONTAL LINE LENGTH
13.007	VLL	VERTICAL LINE LENGTH
13.008	SLC	SCALE UNITS
13.009	HPS	HORIZONTAL PIXEL SCALE
13.010	VPS	VERTICAL PIXEL SCALE
13.011	CGA	COMPRESSION ALGORITHM
13.012	BPX	BITS PER PIXEL
13.013	FGP	FINGER/PALM POSITION
13.014	SPD	SEARCH POSITION DESCRIPTORS
13.015	PPC	PRINT POSITION COORDINATES
13.016	SHPS	SCANNED HORIZONTAL PIXEL SCALE
13.017	SVPS	SCANNED VERTICAL PIXEL SCALE
13.020	COM	COMMENT
13.024	LQM	LATENT QUALITY METRIC
13.025 -13.199	RSV	RESERVED FOR FUTURE DEFINITION by ANSI/NIST-ITL only
13.200-13.900	UDF	USER-DEFINED FIELDS
13.901	RSV	RESERVED FOR FUTURE DEFINITION by ANSI/NIST-ITL only
13.902	ANN	ANNOTATED INFORMATION
13.903	DUI	DEVICE UNIQUE IDENTIFIER
13.904	MMS	MAKE/MODEL/SERIAL NUMBER
13.905 – 13.992	RSV	RESERVED FOR FUTURE DEFINITION by ANSI/NIST-ITL only
13.993	SAN	SOURCE AGENCY NAME
13.995	ASC	ASSOCIATED CONTEXT
13.996	HAS	HASH
13.997	SOR	SOURCE REPRESENTATION

Table L-1 Complete Element Cross-Reference List by Tag Number

EBTS Tag Number	Element ID	Element Name
13.998	GEO	GEOGRAPHIC SAMPLE ACQUISITION LOCATION
13.999	DAT	IMAGE DATA
14.001	LEN	LOGICAL RECORD LENGTH
14.002	IDC	INFORMATION DESIGNATION CHARACTER
14.003	IMP	IMPRESSION TYPE
14.004	SRC	SOURCE AGENCY/ORI
14.005	FCD	FINGERPRINT CAPTURE DATE
14.006	HLL	HORIZONTAL LINE LENGTH
14.007	VLL	VERTICAL LINE LENGTH
14.008	SLC	SCALE UNITS
14.009	HPS	HORIZONTAL PIXEL SCALE
14.010	VPS	VERTICAL PIXEL SCALE
14.011	CGA	COMPRESSION ALGORITHM
14.012	BPX	BITS PER PIXEL
14.013	FGP	FINGER POSITION
14.014	PPD	PRINT POSITION DESCIPTORS
14.015	PPC	PRINT POSITION COORDINATES
14.016	SHPS	SCAN HOR PIXEL SCALE
14.017	SVPS	SCAN VERT PIXEL SCALE
14.018	AMP	AMPUTATED OR BANDAGED
14.020	COM	COMMENT
14.021	SEG	FINGERPRINT SEGMENT POSITION(S)
14.022	NQM	NIST QUALITY METRIC
14.023	SQM	SEGMENTATION QUALITY METRIC
14.024	AFM	ALTERNATE FINGERPRINT QUALITY METRIC
14.025	ASEG	ALTERNATE FINGER SEGMENT POSITION(S)
14.026	SCF	SIMULTANEOUS CAPTURE
14.027	SIF	STITCHED IMAGE FLAG
14.030	DMM	DEVICE MONITORING MODE
14.031	FAP	SUBJECT ACQUISITION PROFILE – FINGERPRINT
14.032-14.199	RSV	RESERVED FOR FUTURE DEFINITION by ANSI/NIST-ITL only
14.200	ISC	IMAGE SOURCE CODE
14.201-14.900	UDF	USER-DEFINED FIELDS
14.901	RSV	RESERVED FOR FUTURE DEFINITION by ANSI/NIST-ITL only
14.902	ANN	ANNOTATED INFORMATION
14.903	DUI	DEVICE UNIQUE IDENTIFIER
14.904	MMS	MAKE/MODEL/SERIAL NUMBER
14.905 – 14.994	RSV	RESERVED FOR FUTURE DEFINITION by ANSI/NIST-ITL only
14.995	ASC	ASSOCIATED CONTEXT
14.996	HAS	HASH
14.997	SOR	SOURCE REPRESENTATION
14.998	GEO	GEOGRAPHIC SAMPLE ACQUISITION LOCATION
14.999	DAT	IMAGE DATA

Table L-1 Complete Element Cross-Reference List by Tag Number

EBTS Tag Number	Element ID	Element Name
15.001	LEN	LOGICAL RECORD LENGTH
15.002	IDC	INFORMATION DESIGNATION CHARACTER
15.003	IMP	IMPRESSION TYPE
15.004	SRC	SOURCE AGENCY/ORI
15.005	PCD	PALM PRINT CAPTURE DATE
15.006	HLL	HORIZONTAL LINE LENGTH
15.007	VLL	VERTICAL LINE LENGTH
15.008	SLC	SCALE UNITS
15.009	HPS	HORIZONTAL PIXEL SCALE
15.010	VPS	VERTICAL PIXEL SCALE
15.011	CGA	COMPRESSION ALGORITHM
15.012	BPX	BITS PER PIXEL
15.013	FGP	FRICTION RIDGE POSITION
15.016	SHPS	SCAN HOR PIXEL SCALE
15.017	SVPS	SCAN VERT PIXEL SCALE
15.018	AMP	AMPUTATED OR BANDAGED
15.020	COM	COMMENT
15.024	PQM	PALM PRINT QUALITY METRIC
15.030	DMM	DEVICE MONITORING MODE
15.031 -15.199	RSV	RESERVED FOR FUTURE DEFINITION by ANSI/NIST-ITL only
15.200	ISC	IMAGE SOURCE CODE
15.201-15.900	UDF	USER-DEFINED FIELDS
15.901	RSV	RESERVED FOR FUTURE DEFINITION by ANSI/NIST-ITL only
15.902	ANN	ANNOTATED INFORMATION
15.903	DUI	DEVICE UNIQUE IDENTIFIER
15.904	MMS	MAKE/MODEL/SERIAL NUMBER
15.905 – 15.992	RSV	RESERVED FOR FUTURE DEFINITION by ANSI/NIST-ITL only
15.993	SAN	SOURCE AGENCY NAME
15.995	ASC	ASSOCIATED CONTEXT
15.996	HAS	HASH
15.997	SOR	SOURCE REPRESENTATION
15.998	GEO	GEOGRAPHIC SAMPLE ACQUISITION LOCATION
15.999	DAT	IMAGE DATA

Table L-2 Record Set Requirements Summary by Type of Transaction

Transaction	Enrollment TOT	T1	T2	T4[1]	T7	T9	T10	T13	T14[3]	T15[2]	T17[2]
Identification Service Transactions											
CRIMINAL TENPRINT SUBMISSION (ANSWER REQUIRED)	CAR	1	1	0-14	0-2	0	0-25	0	0-46	0-10	0-2
CRIMINAL TENPRINT SUBMISSION (NO ANSWER REQUIRED)	CNA	1	1	0-14	0-2	0	0-25	0	0-46	0-10	0-2
CRIMINAL FINGERPRINT DIRECT ROUTE	CPDR	1	1	0-14	0	0	0-25	0	0-46	0-10	0-2
CRIMINAL FINGERPRINT PROCESSING NON-URGENT	CPNU	1	1	0-14	0-2	0	0-25	0	0-46	0-10	0-2
DEPARTMENTAL ORDER CHANNELING ELECTRONIC	DOCE	1	1	0-14	0-2	0	0	0	0-46	0-10	0-2
ELECTRONIC IN/MANUAL OUT USER FEE	EMUF	1	1	0-14	0-2	0	0-25	0	0-46	0-10	0-2
FEDERAL APPLICANT (NO CHARGE)	FANC	1	1	0-14	0-2	0	0-25	0	0-46	0-10	0-2
FEDERAL APPLICANT USER FEE	FAUF	1	1	0-14	0-2	0	0-25	0	0-46	0-10	0-2
FEDERAL NO CHARGE DIRECT ROUTE	FNDR	1	1	0-14	0-2	0	0-25	0	0-46	0-10	0-2
NON-FEDERAL NO CHARGE DIRECT ROUTE	NNDR	1	1	0-14	0-2	0	0-25	0	0-46	0-10	0-2
NON-FEDERAL USER FEE EXPEDITE	NFUE	1	1	0-14	0-2	0	0-25	0	0-46	0-10	0-2
NON-FEDERAL APPLICANT USER FEE	NFUF	1	1	0-14	0-2	0	0-25	0	0-46	0-10	0-2
MISCELLANEOUS APPLICANT CIVIL	MAP	1	1	0-14	0-2	0	0-25	0	0-46	0-10	0-2
KNOWN DECEASED	DEK	1	1	0-14	0-2	0	0-25	0	0-46	0-10	0-2
UNKNOWN DECEASED	DEU	1	1	0-14	0-2	0	0-25	0	0-46	0-10	0-2
MISSING PERSON	MPR	1	1	0-14	0-2	0	0-25	0	0-46	0-10	0-2
AMNESIA VICTIM	AMN	1	1	0-14	0-2	0	0-25	0	0-23	0-10	0-2
LATENT FINGERPRINT IMAGE SUBMISSION	LFS	1	1	0-14	0-10	0	0	0-10	0-14	0-10	0
RAPID FINGERPRINT IDENTIFICATION SEARCH	RPIS	1	1	0-14	0	0	0	0	0-14	0	0
FOREIGN INFORMATION DIRECT ROUTE	FIDR	1	1	0-14	0	0	0-25	0	0-46	0-10	0
ELECTRONIC FINGERPRINT DISPOSITION SUBMISSION	FDSP	1	1	0-14	0	0	0-25	0	0-46	0-10	0-2
IRIS IMAGE IDENTIFICATION SUBMISSION *(Future Capability)*	IIDS	1	1	0	0	0	0	0	0	0	2
Verification Service Transactions											
FINGERPRINT VERIFICATION REQUEST	FVR	1	1	0-14	0	0	0	0	0-14	0	0
Information Service Transactions											
BIOMETRIC IMAGE/FEATURE RETRIEVAL REQUEST	IRQ	1	1	0	0	0	0	0	0	0	0
SUBJECT PHOTO REQUEST	CPR	1	1	0	0	0	0	0	0	0	0
BIOMETRIC AUDIT TRAIL QUERY	BATQ	1	1	0	0	0	0	0	0	0	0
RAP BACK SUBSCRIPTION LIST REQUEST	RBRPT	1	1	0	0	0	0	0	0	0	0
RAP BACK IDENTITY HISTORY SUMMARY REQUEST	RBIHS	1	1	0	0	0	0	0	0	0	0

Table L-2 Record Set Requirements Summary by Type of Transaction

Transaction	Enrollment TOT	T1	T2	T4[1]	T7	T9	T10	T13	T14[3]	T15[2]	T17[2]
Investigation Service Transactions											
TENPRINT FINGERPRINT IMAGE SEARCH	TPIS	1	1	0-14	0	0	0	0	0-14	0	0
TENPRINT RAP SHEET SEARCH REQUEST	TPRS	1	1	0-14	0	0	0	0	0-14	0	0
LATENT FRICTION RIDGE IMAGE SEARCH	LFIS	1	1-2	0-10	0-10	0	0	0-10	0	0	0
LATENT FRICTION RIDGE FEATURES SEARCH	LFFS	1	1-2	0-10	0-10	1-10	0	0-10	0	0	0
LATENT PENETRATION QUERY	LPNQ	1	1	0	0	0	0	0	0	0	0
LATENT REPOSITORY STATISTICS QUERY	LRSQ	1	1	0	0	0	0	0	0	0	0
FACIAL RECOGNITION SEARCH REQUEST	FRS	1	1	0	0	0	1	0	0	0	0
TEXT-BASED PHOTO/SMT SEARCH	TXTSRCH	1	1	0	0	0	0	0	0	0	0
IRIS IMAGE INVESTIGATIVE SEARCH *(Future Capability)*	IIIS	1	1	0	0	0	0	0	0	0	1
EXTERNAL QUERY HISTORY REQUEST	EQHR	1	1	0	0	0	0	0	0	0	0
Data Management Service Transactions											
UNSOLVED LATENT RECORD DELETE REQUEST	ULD	1	1	0	0	0	0	0	0	0	0
BIOMETRIC IMAGE SUBMISSION	FIS	1	1	0-14	0	0	0-50	0	0-46	0-10	0-2
BIOMETRIC DELETE REQUEST	BDEL	1	1	0	0	0	0	0	0	0	0
SUBJECT PHOTO DELETE REQUEST	CPD	1	1	0	0	0	0	0	0	0	0
CIVIL EVENT DELETION REQUEST	CDEL	1	1	0	0	0	0	0	0	0	0
BIOMETRIC DECISION SUBMISSION	BDEC	1	1	0	0	0	0	0	0	0	0
DISPOSITION FILE MAINTENANCE SUBMISSION	DSPE	1	1	0	0	0	0	0	0	0	0
SPECIAL REPOSITORY MAINTENANCE REQUEST	SPMNT	1	1	0-14	0-1	0	0-50	0-1	0-46	0-10	0
RAP BACK SUBSEQUENT SUBSCRIPTION REQUEST - CRIMINAL	RBSCRM	1	1	0	0	0	0	0	0	0	0
RAP BACK SUBSEQUENT SUBSCRIPTION REQUEST - CIVIL	RBSCVL	1	1	0-14	0	0	0	0	0-14	0	0
RAP BACK MAINTENANCE REQUEST	RBMNT	1	1	0	0	0	0	0	0	0	0
EXTERNAL SYSTEM LINK MAINTENANCE REQUEST	XMNT	1	1	0	0	0	0	0	0	0	0
EXTERNAL SYSTEM LINK ACTIVITY REQUEST	XACT	1	1	0	0	0	0	0	0	0	0
SUPERVISED RELEASE NOTIFICATION REQUEST	SRNR	1	1	0	0	0	0	0	0	0	0

[1] Biometric search transactions should contain at least one image.

[2] Type-15 images apply for Palm Print Enrollment and Major Case Print Collections in conjunction with tenprint submissions. Type-17 images apply for Iris Image Enrollment.

[3] For the Type-14, the images associated with the tenprint card source are used for searching and enrollment while the remaining images will be enrolled as secondary supplemental images.

Table L-3 Record Set Requirements Summary by Type of Response

Transaction	TOT	T1	T2	T4*	T7	T9	T10	T13	T14*	T15**	T17**
Identification Service Responses											
RAPID FINGERPRINT IDENTIFICATION SEARCH RESPONSE	RPISR	1	1-2	0	0	0	0-2	0	0	0	0
SUBMISSION RESULTS - ELECTRONIC	SRE	1	1	0	0	0	0-1	0	0	0	0
LATENT SUBMISSION RESULTS	LSR	1	1	0	0	0	0	0	0	0	0
TENPRINT TRANSACTION ERROR	ERRT	1	1	0	0	0	0	0	0	0	0
Verification Service Responses											
SUBMISSION RESULTS – ELECTRONIC	SRE	1	1	0	0	0	0	0	0	0	0
Information Service Responses											
BIOMETRIC AUDIT TRAIL RESPONSE	BATR	1	1	0	0	0	0	0	0	0	0
IMAGE REQUEST RESPONSE	IRR	1	1	0-14	0-20	0-52	0-1	0-10	0-20	0-10	0-2
IMAGE SUMMARY RESPONSE	ISR	1	1	0	0	0	0	0	0	0	0
INFORMATION TRANSACTION ERROR	ERRI	1	1	0	0	0	0	0	0	0	0
PHOTO REQUEST RESPONSE	PRR	1	1	0	0	0	0-4	0	0	0	0
RAP BACK IDENTITY HISTORY SUMMARY RESPONSE	RBIHSR	1	1	0	0	0	0	0	0	0	0
RAP BACK SUBSCRIPTION LIST RESPONSE	RBRPTR	1	1	0	0	0	0	0	0	0	0
Investigative Services Responses											
SEARCH RESULTS - TENPRINT	SRT	1	1	0-280	0-20	0	0	0-20	0-280	0	0
TENPRINT TRANSACTION ERROR	ERRT	1	1	0	0	0	0	0	0	0	0
TENPRINT RAPSHEET RESPONSE	TPRR	1	1	0	0	0	0	0	0	0	0
SEARCH RESULTS - LATENT	SRL	1	1	0-20	0-20	0-70	0	0-20	0-40	0-40	0
LATENT PENETRATION QUERY RESPONSE	LPNR	1	1	0	0	0	0	0	0	0	0
LATENT TRANSACTION ERROR	ERRL	1	1	0	0	0	0	0	0	0	0
LATENT REPOSITORY STATISTICS RESPONSE	LRSR	1	1	0	0	0	0	0	0	0	0
EXTERNAL HISTORY REQUEST RESPONSE	EHRR	1	1	0	0	0	0	0	0	0	0
EXTERNAL QUERY HISTORY REQUEST RESPONSE - SUMMARY	EQRR	1	1	0	0	0	0	0	0	0	0
EXTERNAL QUERY HISTORY ERROR RESPONSE	EQER	1	1	0	0	0	0	0	0	0	0
BIOMETRIC SEARCH ERROR	ERRB	1	1	0	0	0	0	0	0	0	0
TRANSACTION ERROR (ELECTRONIC RESPONSE)	ERRR	1	1	0	0	0	0	0	0	0	0
SEARCH RESULTS - BIOMETRIC	SRB	1	1	0	0	0	0-50	0	0	0	0-51

Table L-3 Record Set Requirements Summary by Type of Response

Transaction	TOT	T1	T2	T4*	T7	T9	T10	T13	T14*	T15**	T17**
Notification Service Responses											
UNSOLVED LATENT MATCH NOTIFICATION	ULM	1	1	0-14	0-10	0	0	0-10	0-20	0-10	0
UNSOLICITED UNSOLVED BIOMETRIC DELETE	UUBD	1	1	0	0	0	0	0	0	0	0
UNSOLICITED UNSOLVED LATENT DELETE	UULD	1	1	0	0	0	0	0	0	0	0
UNSOLVED BIOMETRIC MATCH NOTIFICATION	UBM	1	1	0	0	0	0-2	0	0	0	0
RAP BACK ACTIVITY NOTIFICATION	RBN	1	1	0	0	0	0	0	0	0	0
RAP BACK RENEWAL NOTIFICATION	RBRN	1	1	0	0	0	0	0	0	0	0
UNSOLICITED HIT NOTIFICATION	UHN	1	1	0	0	0	0	0	0	0	0
SPECIAL POPULATION COGNIZANT NOTIFICATION	SPN	1	1	0-14	0-1	0	0-1	0-1	0-14	0	0
Data Management Service Responses											
SUBJECT PHOTO DELETE RESPONSE	PDR	1	1	0	0	0	0	0	0	0	0
BIOMETRIC DECISION RESPONSE	BDECR	1	1	0	0	0	0	0	0	0	0
UNSOLVED LATENT RECORD DELETE RESPONSE	ULDR	1	1	0	0	0	0	0	0	0	0
ADMINISTRATIVE TRANSACTION ERROR	ERRA	1	1	0	0	0	0	0	0	0	0
BIOMETRIC DELETE RESPONSE	BDELR	1	1	0	0	0	0	0	0	0	0
BIOMETRIC IMAGE SUBMISSION RESPONSE	FISR	1	1	0	0	0	0	0	0	0	0
DISPOSITION FILE MAINTENANCE RESPONSE	DSPR	1	1	0	0	0	0	0	0	0	0
SPECIAL REPOSITORY MAINTENANCE RESPONSE	SPMNTR	1	1	0	0	0	0	0	0	0	0
CIVIL EVENT DELETION RESPONSE	CDELR	1	1	0	0	0	0	0	0	0	0
RAP BACK SUBSCRIPTION RESPONSE	RBSR	1	1	0	0	0	0	0	0	0	0
RAP BACK MAINTENANCE RESPONSE	RBMNTR	1	1	0	0	0	0	0	0	0	0
SUPERVISED RELEASE NOTIFICATION RESPONSE	SRNRR	1	1	0	0	0	0	0	0	0	0
EXTERNAL SYSTEM LINK MAINTENANCE RESPONSE	XMNTR	1	1	0	0	0	0	0	0	0	0
EXTERNAL SYSTEM LINK ACTIVITY RESPONSE	XACTR	1	1	0	0	0	0	0	0	0	0

* Normally, either 14 Type-4 images or 3 Type-14 are included in tenprint submissions. Type-2 AMP field must account for all missing images when fewer images are sent. When submitting transactions with Type-14 records, the Type-2 AMP (2.084) field should be used to indicate when there is an image missing (e.g., an entire slap); the Type-14 AMP (14.018) field should be used to indicate a missing or bandaged finger within an image (e.g., a missing index finger in a slap image).
** Type-15 images apply for Palmprint Enrollment and Major Case Print Collections in conjunction with tenprint submissions. Type-17 images apply for Iris Image Enrollment.

Table L-4 Transaction/Response/Error TOT Correspondence

Transaction	TOT	Response TOTs	Error TOTs
Identification Service Transactions			
CRIMINAL TENPRINT SUBMISSION (ANSWER REQUIRED)	CAR	SRE	ERRT
CRIMINAL TENPRINT SUBMISSION (NO ANSWER REQUIRED)	CNA	None	ERRT
CRIMINAL FINGERPRINT DIRECT ROUTE	CPDR	SRE	ERRT
CRIMINAL FINGERPRINT PROCESSING NON-URGENT	CPNU	SRE	ERRT
DEPARTMENTAL ORDER CHANNELING ELECTRONIC	DOCE	SRE	ERRT
ELECTRONIC IN/MANUAL OUT USER FEE	EMUF	SRE	ERRT
FEDERAL APPLICANT (NO CHARGE)	FANC	SRE	ERRT
FEDERAL APPLICANT USER FEE	FAUF	SRE	ERRT
FEDERAL NO CHARGE DIRECT ROUTE	FNDR	SRE	ERRT
NON-FEDERAL NO CHARGE DIRECT ROUTE	NNDR	SRE	ERRT
NON-FEDERAL USER FEE EXPEDITE	NFUE	SRE	ERRT
NON-FEDERAL APPLICANT USER FEE	NFUF	SRE	ERRT
MISCELLANEOUS APPLICANT CIVIL	MAP	SRE	ERRT
KNOWN DECEASED	DEK	SRE	ERRT
UNKNOWN DECEASED	DEU	SRE	ERRT
MISSING PERSON	MPR	SRE	ERRT
AMNESIA VICTIM	AMN	SRE	ERRT
LATENT FINGERPRINT IMAGE SUBMISSION	LFS	LSR	ERRL
RAPID FINGERPRINT IDENTIFICATION SEARCH	RPIS	RPISR	ERRT
FOREIGN INFORMATION DIRECT ROUTE	FIDR	SRE	ERRT
IRIS IMAGE IDENTIFICATION SUBMISSION *(Future Capability)*	IIDS	SRE	ERRB
ELECTRONIC FINGERPRINT DISPOSITION SUBMISSION	FDSP	SRE	ERRT
Verification Service Transactions			
FINGERPRINT VERIFICATION REQUEST	FVR	SRE	ERRT
Information Service Transactions			
BIOMETRIC IMAGE/FEATURE RETRIEVAL REQUEST	IRQ	IRR, ISR	ERRI
SUBJECT PHOTO REQUEST	CPR	PRR	PRR, ERRI
BIOMETRIC AUDIT TRAIL QUERY	BATQ	BATR	ERRI
RAP BACK SUBSCRIPTION LIST REQUEST	RBRPT	RBRPTR	ERRI
RAP BACK IDENTITY HISTORY SUMMARY REQUEST	RBIHS	RBIHSR	ERRI

Table L-4 Transaction/Response/Error TOT Correspondence

Transaction	TOT	Response TOTs	Error TOTs
Investigation Service Transactions			
TENPRINT FINGERPRINT IMAGE SEARCH	TPIS	SRT	ERRT
TENPRINT RAP SHEET SEARCH REQUEST	TPRS	TPRR	ERRT
LATENT FRICTION RIDGE IMAGE SEARCH	LFIS	SRL	ERRL
LATENT FRICTION RIDGE FEATURES SEARCH	LFFS	SRL	ERRL
LATENT PENETRATION QUERY	LPNQ	LPNR	ERRL
LATENT REPOSITORY STATISTICS QUERY	LRSQ	LRSR	ERRA
FACIAL RECOGNITION SEARCH REQUEST	FRS	SRB	ERRB
TEXT-BASED PHOTO/SMT SEARCH	TXTSRCH	SRB	ERRB
IRIS IMAGE INVESTIGATIVE SEARCH *(Future Capability)*	IIIS	SRB	ERRB
EXTERNAL QUERY HISTORY REQUEST	EQHR	EQRR, EHRR	EQER, ERRR
Data Management Service Transactions			
UNSOLVED LATENT RECORD DELETE REQUEST	ULD	ULDR	ERRL
BIOMETRIC IMAGE SUBMISSION	FIS	FISR	ERRI,ERRA
BIOMETRIC DELETE REQUEST	BDEL	BDELR	ERRA
SUBJECT PHOTO DELETE REQUEST	CPD	PDR	PDR
CIVIL EVENT DELETION REQUEST	CDEL	CDELR	ERRA
BIOMETRIC DECISION SUBMISSION	BDEC	BDECR	ERRA
DISPOSITION FILE MAINTENANCE SUBMISSION	DSPE	DSPR	ERRA
SPECIAL REPOSITORY MAINTENANCE REQUEST	SPMNT	SPMNTR	ERRA
RAP BACK SUBSEQUENT SUBSCRIPTION REQUEST - CRIMINAL	RBSCRM	RBSR	ERRA
RAP BACK SUBSEQUENT SUBSCRIPTION REQUEST - CIVIL	RBSCVL	RBSR	ERRA
RAP BACK MAINTENANCE REQUEST	RBMNT	RBMNTR	ERRA
EXTERNAL SYSTEM LINK MAINTENANCE REQUEST	XMNT	XMNTR	ERRA
EXTERNAL SYSTEM LINK ACTIVITY REQUEST	XACT	XACTR	ERRA
SUPERVISED RELEASE NOTIFICATION REQUEST	SRNR	SRNRR	ERRA

Appendix M: Transaction Messages

Appendix M lists the transaction messages codes, message condition for each code, and description of the code. Insert count is generally the minimum inserts to be provided; for a few codes, a range of insert counts is shown. In all cases, the maximum number of inserts is three. Additional information on formatting can be found in section 3.7 “Error Message Format”. Message codes include a letter corresponding to a general message type, as designated in the following list:

A - Authorization - Security Errors
B - General Biometrics
E - Element - Intersegment and External Message Element Errors
H - Header - Intersegment Message Header Errors
L - Logic - Operational Errors
M - Message - Informational Messages
R - Error with Retry Allowed
RB - Rap Back
S - Status - Segment Status Errors
W - Warning Only

Table M-1 Transaction Message

Code	Condition for Message	Description	Count	Insert #1	Insert #2	Insert #3
A0001	Unauthorized ULF delete	Requested deletion from ULF not authorized.	0			
A0004	Unauthorized EBTS Transaction	Requestor is not authorized for transaction type %1.	1	TOT of incoming message		
A0009	Latent Search Queue Request Reject	This Latent Search Queue modification request is invalid.	0			
A0015	Unauthorized File Update	Requestor is not authorized to update the requested file.	0			
A0016	Unauthorized Repository Access	Requestor search of repository %1 not authorized	1	NDR(s) (each applicable NDR value is listed separated by commas)		
A0017	Unauthorized Dissemination Information Access	Requestor does not own the imagery in the audit trail dissemination information request	0			
A0018	Unauthorized Biometric Delete	Requested deletion of UCN %1 BSI %2 is not authorized for requestor	2	UCN	BSI	
A0019	Rap Back Subscription Does Not Exist	An active Rap Back subscription does not exist for the UCN %1 and subscription %2	2	UCN	RBSI	
A0020	The Maximum Rap Back Subscription List Size was Exceeded.	The Maximum Rap Back Subscription List Size was Exceeded. Either further filter the subscriptions returned and resubmit, or contact CJIS customer service.	0			
A0021	External Link Anomaly	The External Subject Identifier %1 has no association with the UCN %2.	2	ESI	UCN	
A0022	External Link Anomaly	The External Subject Identifier %1 is already associated with another UCN %2.	2	ESI	UCN	
A0023	UCN Does Not Exist	The UCN %1 does not exist in NGI repositories.	1	UCN		
A0024	External Link Anomaly	The External Subject Identifier %1 does not exist in NGI repositories.	1	ESI		
A0025	UCN does not Exist in FSI Repository	The %1 does not exist in the NGI RISC FSI repository.	1	UCN		
A0026	UCN has Multiple Events in FSI Repository	The %1 UCN has multiple events, the EVI must be specified.	1	UCN		
A0027	Unauthorized Biometric Delete by Event	Requested deletion of UCN %1 EVI %2 is not authorized for requestor	2	UCN	EVI	

Table M-1 Transaction Message

Code	Condition for Message	Description	Count	Insert #1	Insert #2	Insert #3
A0028	External Link Already Exists	The External Subject identifier %1 is already associated with UCN %2.	2	ESI	UCN	
B0001	Unable to Generate Template	A template could not be created for the submitted image	0			
B0002	Corrupt Image	The submitted image is corrupted	0			
E0001	Required element missing	Mandatory element %1 was not supplied in message.	1	Element Name		
E0002	Element failed validation	Element %1, with value of [%2] contains invalid data.	2	Element Name	Element Value	
E0003	Element failed validation	Element %1, with value of [%2] contains invalid data. The data may not comply with the acceptable range of values.	2	Element Name	Element Value	
E0004	EBTS record parse error	EBTS logical record type %1 containing IDC of [%2] in message does not comply with message Contents or Length field values or the record is not parseable	2	Logical Record Type	IDC value or the value -1 if the named logical record is missing or is a Type-1 record.	
E0005	EBTS field parse error	EBTS field %1 could not be parsed. Check use of separator characters and presence of all required subfields.	1	Element Name		
E0006	Field relationship error	The value of element %1 is inconsistent with the value of element %2.	2	Element Name	Element Name	
E0012	Message Length Inconsistent	The length of the CJIS WAN message is inconsistent with the sum of the lengths of the logical records contained within it.	0			
E0013	NFS File Write Error	NFS file %1 produced a write error during file transfer %2 %3.	1-3	FILEHANDLE	Free Text	Free Text
E0014	Invalid EVI for Delete Operation	Deletion request with invalid EVI %1	1	EVI		
H0001	Required header element missing	Mandatory element %1 was not supplied in message header.	1	Element Name		
H0002	Header element failed validation	Header element %1, with value of [%2], contains invalid data.	2	Element Name	Element Value	
H0003	Header element failed validation (range)	Header element %1, with value of [%2], contains invalid data. The data may not comply with the acceptable range of values.	2	Element Name	Element Value	
L0001	SPC Repository Full	SPC repository %1 is at max allowed records; to add new subject, delete existing subject.	1	NDR		
L0002	Subject does not exist in the Repository	Subject with identifier %1 does not exist in repository.	1	UCN		

Table M-1 Transaction Message

Code	Condition for Message	Description	Count	Insert #1	Insert #2	Insert #3
L0003	SPC Repository does not exist	Cannot perform requested action, SPC repository %1 does not exist. Inform Segment Administrator of possible SPC File Synchronization error.	1	NDR		
L0004	File image not available	The images for subject identifier %1 are not available from repository %2.	2	UCN	NDR	
L0005	High Penetration Search Rejected	Latent search penetration estimate of %1 percent exceeds the allowable limit of %2 percent.	2	Request Percent	Authorization Cap	
L0006	Invalid image type	The supplied image(s) could not be used for characterization of subject.	0			
L0007	Features not usable	The supplied features could not be used for requested search.	0			
*L0008	Characteristics quality low	The quality of the characteristics is too low to be used.	0			
L0009	Image decompression error	Error occurred during decompression of the images.	0			
L0010	Cannot search an empty SPC repository	A search request was made against SPC repository number %1 which currently contains no subjects. To differentiate from a search with no results, this error is being returned.	1	NDR		
L0011	Subject already exists, duplicates not allowed in Criminal or Civil Files	A request was made to add subject identifier %1 to Criminal or Civil File in which the subject already exists.	1	UCN		
L0012	ULF Delete Error	An error was encountered in processing the requested deletion from the Unsolved Latent File.	0			
L0013	General Logic Error	A general logic error was detected that is not currently defined. Optional error message: %1 %2 %3.	0-3	Free Text	Free Text	Free Text
L0014	ULF Delete Subject Missing	Cannot perform the ULF delete request for %1 because the subject is not present in the ULF.	1	SCNA or UCN		
L0015	Attempt to Remove Last Arrest, Court, or Custody Component	An attempt has been made to remove the last %1 from subject record %2.	2	Element Name	UCN	

Table M-1 Transaction Message

Code	Condition for Message	Description	Count	Insert #1	Insert #2	Insert #3
L0016	Latent Search Penetration Estimate	NOTICE ONLY, NOT AN ERROR – Latent search penetration estimate is %1. Your limit is currently %2.	2	Request Percentage	Authorization Cap	
L0018	Latent search queue full	The requested search exceeds the allocation for your organization or state.	0			
L0019	Subject already exists, duplicate identifiers not allowed in SPC file	A request was made to add subject identifier %1 to SPC repository %2 in which the subject already exists. Subjects may NOT be duplicated within this repository.	2	UCN	NDR	
L0020	Subject does not exist in SPC file	A request was made to delete or update subject identifier %1 to SPC repository %2. The subject does not exist in this repository.	2	UCN or BSI	NDR	
L0023	SID required	NFF participants must provide a SID on a criminal retain tenprint submission.	0			
L0024	SID already exists for NFF submission	The SID provided in the criminal tenprint submission, %1, is already associated with the subject with FBI number %2 and could not be established for a new NFF subject.	2	SID	UCN	
L0025	SID already exists	The SID provided in the criminal ten- print submission, %1, is already associated with the subject with FBI number %2 and could not be established for a new subject.	2	SID	UCN	
L0028	Exceeded ICO maximum length	Cannot add data because the maximum length of ICO field would be exceeded. There are only %1 characters remaining in the ICO field.	1	Number of unused bytes remaining in ICO field (ASCII representation).		
L0029	Invalid update of subject with AUD C	Cannot update subject record %1 because it contains an AUD = C	1	UCN		
L0031	Invalid update of subject record	Cannot update subject record %1 because of its AUD value.	1	UCN		
L0032	Duplicate DOA and DOS	Cannot update subject record because DOA %1 and corresponding DOS already exist. Refer to FBI Number %2.	2	DOA	UCN	
L0033	Element Entry Limit Exceeded	The requested update of this record would cause the maximum number of entries of the %1 field to be exceeded.	1	Field Name		
L0034	Existing identification comments	Cannot overwrite existing ICO.	0			
L0035	DOD prior to DOA	Date of arrest in submission is later than the date of death in subject's record.	0			

Table M-1 Transaction Message

Code	Condition for Message	Description	Count	Insert #1	Insert #2	Insert #3
L0036	Conversion anomaly	Cannot add a conversion cycle for an NFF participating state.	0			
L0037	DOA not later than existing DOB	Date of arrest in submission is prior to existing date of birth in the subject's record.	0			
L0038	SID already exists from NFF state	Cannot establish new SID %1 for this subject because your state has already established SID %2 for this subject.	2	SID from submission	Existing SID	
L0040	No Matching DOA	There is no matching DOA in the subject's record.	0			
L0041	Cannot Update Due to Inactive Data	The subject cycle cannot be updated due to inactive record status.	0			
L0042	No Matching Court Data	Cannot update this event - no data can be deleted when no matching court data is found.	0			
L0045	Data Already On File	Cannot update this cycle - data already exists in record.	0			
L0046	TPTP Notify Error	AFIS Search number %1 or candidate number %2 cannot be associated with previous search.	2	SCNA	UCN	
L0052	Submitter is not Authorized to Update Record	Requestor is not authorized to perform the requested file maintenance action.	0			
L0057	Improper Finger Specified	Latent searches cannot process %1 possible finger positions for %2 supplied search fingers.	2	FGN_CNT	AFV_CNT	
L0058	UCN and NDR format incompatible	The designated repository (%1) does not correlate to the provided record format number (%2).	2	NDR	UCN	
L0059	Duplicate fingers	Ten finger information supplied for field %1 (%2) is incorrect.	2	Name of field	Field Value	
L0060	Death is already recorded for this subject	An indication that this subject is deceased is currently present in this record.	0			
L0063	Existing Data Condition	Data cannot be added to this field, %1, because data is already present.	1	Field Name		
L0079	Invalid SID	The SID %1 failed III edit check.	1	SID value		
L0109	Poor Image Quality	The quality of the images is too poor to permit processing.	0			
L0110	MRD Merge Failure	Tenprint submission failed to merge with MRD data.	0			

Table M-1 Transaction Message

Code	Condition for Message	Description	Count	Insert #1	Insert #2	Insert #3
L0114	TOT/Submission Data Error	The Type of Transaction is inconsistent with the Reason Fingerprinted.	0			
L0115	Other QC Error	A QC error has occurred.	0			
*L0116	Fingerprint Pattern Quality Error	Fingerprint pattern(s) not discernible	0			
*L0117	Fingerprint Pattern Area Error	Insufficient pattern area(s) recorded for identification purposes	0			
*L0118	ITN Image Quality/Sequence Error	Erroneous or incomplete fingerprint(s) on images: fingers or hands out of sequence, printed twice, missing, and no reason given.	0			
L0119	Charge listed needs literal translation	The charge listed in the submission requires that a literal translation be provided.	0			
L0121	Invalid update of subject with AUD M	Cannot update record %1 because this record is currently contained in the manual file. Record must be converted.	1	UCN		
L0122	No SPC Add	Unable to complete SPC Add for identifier %1 in repository %2 and ORI %3.	3	UCN	NDR	ORI
L0123	No SPC Delete	Unable to complete SPC Delete for identifier %1 in repository %2 and ORI %3.	3	UCN	NDR	ORI
L0124	Unacceptable Criteria	The submission does not meet latent acceptance criteria.				
L0125	Invalid ORI	This ORI, %1, is not present in the CCA file.	1	ORI value from Maintenance Request		
L0126	Invalid CRI	This CRI, %1, is not present in the CCA file.	1	CRI value from Maintenance Request		
L0128	Missing SRE	This file maintenance request must contain a value for SRE.	0			
L0130	File maintenance element error	This file maintenance request contains invalid data, %1, in the field %2.	2	Field value from Maintenance Request	Field Name	
L0131	Required element missing	Mandatory element %1 was omitted from message.	1	Element Name		
L0133	Fingerprint Image Submission Non-ident	The subject of this Fingerprint Image Submission contains UCN %1, which is not contained in the FBI Subject Criminal History files.	1	UCN		

Table M-1 Transaction Message

Code	Condition for Message	Description	Count	Insert #1	Insert #2	Insert #3
L0139	Extraneous Data	The file maintenance request contained data for %1 which is either not needed or not allowed in this context.	1	Field Name		
L0144	Field Relationship Error	The value of element %1 is inconsistent with the value of element %2.	2	Element Name	Element Name	
L0147	Contributor has remote capability	The contributing state has remote capability.	0			
L0148	Poor Latent Image Quality	The image quality is not adequate for conducting an AFIS search.	0			
L0149	Bad Search Criteria	The descriptive search criteria is not adequate or is incomplete.	0			
L0150	Unassigned FBI Number	Subject %1 may be in the FBI manual files, but does not exist in the Subject Criminal History File.	1	UCN		
L0151	Photo Not Available	Photo Not Available	0			
L0152	Photo Action on Improper AUD Code	CJIS cannot retrieve or delete the cited photo because the associated record is purged, expunged, not automated, deceased, or deleted.	0			
L0153	Photo Action on AUD C Record	CJIS cannot retrieve or delete the cited photo with FBI %1 because it has been consolidated with FBI %2.	2	UCN	UCN	
L0154	SID / Multiple UCNs	The SID in the maintenance request matches multiple UCNs in the SCH	0			
L0155	The palm image orientation is bad	The palm image orientation is too poor to permit processing	0			
L0156	The supplemental image orientation is bad	The supplemental image orientation is too poor to permit processing	0			
L0157	Failure in segmenting image	Failure in segmenting image	0			
L0158	Failure in validating secondary biometrics with fingerprints on file	Failure in validating secondary biometrics with fingerprints on file	0			
L0159	The palmprint imagery is incomplete	The palmprint imagery is incomplete	0			
L0160	The supplemental imagery is incomplete	The supplemental imagery is incomplete	0			
L0161	Invalid UCN for Delete operation	Deletion Request with invalid UCN %1	1	UCN		

Table M-1 Transaction Message

Code	Condition for Message	Description	Count	Insert #1	Insert #2	Insert #3
L0162	Secondary Biometric Delete Error	Unable to delete biometric of type %1, biometric set identifier %2 for identifier %3	1	IMT	BSI	UCN
L0163	Secondary Biometric Enrollment Error	Unable to enroll biometric of type %1 for identifier %2	2	IMT	UCN	
L0164	Enrollment Request without Fingerprints (no MOU)	Enrollment Request without Fingerprints (no MOU)	0			
L0165	Fingerprint and Secondary Biometric Enrollment Failed Validation	Unable to enroll Fingerprints, secondary biometric enrollment was not attempted.	0			
L0166	Enrollment Failure due to1-to-1 Fingerprint Verification	Enrollment failure,Fingerprints failed 1-to-1 verification with Fingerprints on file	0			
L0167	Biometric Sample Failed Validation	The biometrics provided failed to validate against an existing Identity	0			
L0169	Biometric Not Available	The requested biometric for UCN %1 is not available	1	UCN		
L0170	Photo Image Delete Error	No Photo images were deleted, the DOA %1 has multiple events. Please contact CJIS customer service.	1	DOA		
L0176	Record No Longer on File - Expunged	Pointer for submitting state has been expunged	0			
L0179	Must submit through contracting criminal justice agency	Must submit through contracting criminal justice agency	0			
L0181	Document Reject - Other	Document Rejected. See %1 %2 %3	0-3	Free Text	Free Text	Free Text
L0182	Menard vs Saxbe Expungement	Event specified for update has been expunged per Menard vs Saxbe criteria	0			
M0001	Unsolved Record Status	Unsolved record removed from unsolved repository	0			
M0002	Unsolved Record Status	Unsolved record retained in unsolved repository	0			
M0003	Unsolved Record Status	Unsolved record retained, requestor not owner	0			
M0004	Unsolved Record Status	Unsolved record retained, probe is unsolved	0			
M0005	Unauthorized Repository Access	Requestor search of repository %1 not authorized	1	NDR(s) (each applicable NDR value is listed separated by commas)		
M0006	Mix of Known and Unsolved Records	Request contains mix of Known and Unsolved records for search, the Unsolved records in repository %1 were not searched	1	NDR		

Table M-1 Transaction Message

Code	Condition for Message	Description	Count	Insert #1	Insert #2	Insert #3
M0007	Mix of Known and Unsolved Records	Request contains mix of Known and Unsolved records for search, the Known records in repository %1 were not searched	1	NDR		
M0008	Caveat for Returning Matched Minutiae	This match was made using information beyond feature data	0			
M0009	Audit Trail Incomplete	Only latest 100 image disseminations are included, contact CJIS customer service for further audit information, or further limit the biometric audit trail request and resubmit.	0			
M0010	Additional Biometric Sets were deleted besides what is reported	The maximum number of deleted biometric sets for reporting has been exceeded, contact CJIS customer service for the remainder of the deleted records.	0			
M0011	Biometric Sample Quality Below Threshold	The %1 biometric for UCN %2 fails to meet NGI Minimum Image Quality Standards and has not been enrolled	2	IMT	UCN	
M0012	Biometric Sample Failed Validation	The %1 biometric for UCN %2 has failed validation with Fingerprints on file and was not enrolled	2	IMT	UCN	
M0013	Enrollment Request without Fingerprints (no MOU)	The %1 biometric enrollment request had no accompanying Fingerprints (no MOU)	1	IMT		
M0014	Photo not Available	The requested photo is not available	0			
M0015	Potential Identity Theft Victim – Fingerprint Match	The fingerprints of the individual match an Identity record; however, the descriptive information provided does match a different Identity record. The individual may be a victim of Identity Theft.	0			
M0016	Potential Identity Theft Victim – Fingerprint No Match	The fingerprints of the individual do not match a Identity record; however, the descriptive information provided matches a Identity record. The individual may be a victim of identity theft.	0			
M0017	LESC Quota Exceeded	The LESC was not searched due to daily quota exceeded.	0			
M0018	LESC Not Searched	Based on TP Identification search content the LESC was not searched.	0			
M0019	Photo Images from Multiple Events	The Photo images returned span multiple events for the DOA %1 specified in request.	1	DOA		
M0021	Matching Minutiae Could Not be Returned	Matched minutiae could not be returned for one or more of the candidates.	0			

Table M-1 Transaction Message

Code	Condition for Message	Description	Count	Insert #1	Insert #2	Insert #3
M0022	Biometric Sample Failed Validation	The %1 biometric for UCN %2 has failed validation with Fingerprints in submission and was not enrolled	2	IMT	UCN	
M0023	Biometric Not Avaliable	The requested biometric for UCN %1 is not available	1	UCN		
M0024	Image Retrieval Element Failed Validation	Image retrieval for SI %1 contains invalid data for element %2, with value of [%3]	3	SI (from BID)	Element Name	Element Value
M0025	Image Retrieval Field Relationship Error	Image Retrieval for SI %1 contains an inconsistency between element %2 and element %3	~~2~~ 3	SI (from BID)	Element Name	Element Name
M0026	Photo(s) Not Enrolled to Matcher	The following facial photos were retained for UCN %1 but fail to meet NGI Minimum Image Quality Standards and were not enrolled for searching: %2	2	UCN	BSI (List of BSI's separated by commas. If MSG field becomes full another MSG is generated with remaining BSIs)	
M0027	Unauthorized to Establish External Link	The requestor is not authorized to establish external link with TOT %1	1	TOT of incoming message		
M0028	External Link Already Exists	The External Subject identifier %1 is already associated with UCN %2	2	ESI	UCN	
M0029	External Link Already Exists	The UCN %1 is already associated with an ESI: %2	2	UCN	ESI (of previously established external link for same external system)	
M0033	RISC Notification from Rapid and Investigative Searches, as well as Biometric Decision	A %1 request submitted by %2 with TCN %3 resulted in a potential match to your agency's RISC record as referenced in this notification	3	TOT (of the submission)	CRI (CRI1 from submission)	TCN (from submission)
M0041	Match Notification from Cascaded Search of ULF with Retained Biometrics	Biometrics submitted by %1 are a potential match to your agency's Unsolved Latent File record as referenced in this notification	1	CRI (CRI1 of cascaded search submission)		
M0042	Match Notification from Cascaded search of ULF with Non-Retain Biometrics	Non-retain biometrics submitted by %1 / %2 are a potential match to your agency's ULF record as referenced in this notification. If contact information can't be located for %1 in NCIC or Nlets and additional information is needed, contact the CJIS Division at 304-625-5868.	2	ORI (ORI of non-retain submission)	CRI (CRI1 of non-retain submission)	
M0043	Match Notification from Biometric Decision on ULF record	A Biometric Decision with TCN %1 submitted by %2 is a potential match to your agency's Unsolved Latent File record as referenced in this notification. Your ULF record is enrolled as UCN %3.	3	TCN (of BDEC submission)	CRI (CRI1 of the BDEC submission)	UCN (Of ULF record from candidate list, not legacy SCNA)
M0044	Match Notification from Cascaded Search of UPF with Retained Biometrics	Biometrics submitted by %1 are a potential match to your agency's Unsolved Photo File record as referenced in this notification	1	CRI (CRI1 of cascaded search submission)		

Table M-1 Transaction Message

Code	Condition for Message	Description	Count	Insert #1	Insert #2	Insert #3
M0045	Match Notification from Cascaded search of UPF with Non-Retain Biometrics	Non-retain biometrics submitted by %1 / %2 are a potential match to your agency's UPF record as referenced in this notification. If contact information can't be located for %1 in NCIC or Nlets and additional information is needed, contact the CJIS Division at 304-625-3223.	2	ORI (ORI of non-retain submission)	CRI (CRI1 of non-retain submission)	
M0046	Match Notification from Biometric Decision on UPF record	A Biometric Decision with TCN %1 submitted by %2 is a potential match to your agency's Unsolved Photo File record as referenced in this notification.	3	TCN (of BDEC submission)	CRI (CRI1 of the BDEC submission)	UCN (UCN of UPF record from candidate list)
M0047	Match Notification from Cascaded Search of SPC with Retained Biometrics	Biometrics submitted by %1 are a potential match to your agency's Special Population Cognizant File record as referenced in this notification	1	CRI (CRI1 of cascaded search submission)		
M0048	Match Notification from Cascaded search of UPF with Non-Retain Biometrics	Non-retain biometrics submitted by %1 / %2 are a potential match to your SPC file as referenced in this notification. If contact information can't be located for %1 in NCIC or Nlets and additional information is needed, contact the CJIS Division at 304-625-5868.	2	ORI (ORI of non-retain submission)	CRI (CRI1 of non-retain submission)	
M0049	Match Notification from Biometric Decision on SPC record	A Biometric Decision with TCN %1 submitted by %2 is a potential match to your agency's SPC File record as referenced in this notification. Your SPN record is enrolled as UCN %3.	3	TCN (of BDEC submission)	CRI (CRI1 of the BDEC submission)	UCN (UCN of SPC record from candidate list)
M0050	Supervised Release Identity Restoration Triggering Event	The Identity associated with your agency's supervised release has been restored to its previous state.	0			
M0051	SMT Photo Missing Descriptions	SMT photo, biometric set identifier %1, was retained for UCN %2 but did not include the following required SMT descriptive EBTS fields and may not be returned for a Text Based SMT search: %3	3	BSI	UCN	Field Tag (List of field tag separated by commas)
M0052	ULF Add Error	Latent Print failed to deposit into the Unsolved Latent File. A search of the criminal master file (NDR1) is required prior to enrollment.	0			
M0055	Unable to use legacy identifier.	Identifier %1 is now known as UCN %2	2	Legacy Identifer	UCN	
M0056	Facial Photo - Modified multiple subjects	The Photo Facial Biometric %1 for UCN %2 included multiple subjects and has been modified to include one subject.	2	BSI	UCN	
M0057	Facial Photo - Multiple subjects not enrolled	The Photo Facial Biometric for UCN %1 included multiple face/images and has not been enrolled.	1	UCN		
RB001	Unauthorized to Participate in Rap Back Service	Requestor is not authorized to participate in Rap Back Service.	0			
RB002	Unable to Create Rap Back Subscription	The Rap Back Subscription was not created	0			
RB003	Unauthorized Trigger Event	Requestor is not authorized for Rap Back Trigger %1	1	RBT [Each unauthorized event trigger description separated by commas]		

Table M-1 Transaction Message

Code	Condition for Message	Description	Count	Insert #1	Insert #2	Insert #3
RB004	Invalid Expiration Date	An invalid Rap Back expiration date was requested, changed to maximum allowed date %1	1	Date of expiration in the form CCYYMMDD		
RB005	Invalid TOT for Rap Back Service Subscription	The TOT %1 cannot be used for a Rap Back subscription request	1	TOT		
RB006	Rap Back Subscription Access Error	Contributor is not a Rap Back subscriber for subscription %1 on the Identity %1.	2	RBSI	UCN	
RB007	Rap Back Subscription Expired	Rap Back maintenance cannot be performed on subscription %1 because it has expired or been cancelled. A new Rap back subscription must be established.	1	RBSI		
RB009	Rap Back Consolidation Triggering Event	A Consolidation of NGI Identities has resulted in the information for deleted identity (ies) (UCN(s) %1 being consolidated with the retained Identity UCN %2.	2	UCN [Each killed UCN is listed and separated by commas]	UCN [The kept UCN]	
RB010	Rap Back Identity Deletion Triggering Event	The Identity associated with UCN:%1 has been deleted from NGI, resulting in the deletion of your Rap Back Subscription ID#:%2	2	UCN	RBSI	
RB011	Death Notice with Fingerprints	Person with UCN:%1 has been reported to FBI CJIS as deceased. Deceased's fingerprints were provided.	1	UCN		
RB012	Death Notice without Fingerprints	Person with UCN:%1 has been reported to FBI CJIS as deceased. Deceased's fingerprints were not provided.	1	UCN		
RB013	Rap Back Subscription Does Not Exist	An active Rap Back subscription does not exist for the UCN %1 and subscription %2	2	UCN	RBSI	
RB014	Rap Back Subscription Deleted with Civil Event	Rap Back Subscription %1 was deleted due to the Civil event being deleted for UCN %2	2	RBSI (if multiple then they are listed and separated by commas)	UCN	
RB015	The Rap Back Specification is Missing Required Fields	The Rap Back Subscription was not created due to the %1 not being specified	1	Field ~~Tag~~ Name		
RB016	Rap Back Renewal Notification	The Rap Back subscription %1 will expire on %2 unless the expiration date is extended or the term renewed through a Rap Back maintenance request	2	RBSI	Date of expiration in the form CCYYMMDD	
RB017	Rap Back Identity Restoration Triggering Event	The 1% action has been reversed in NGI for UCN %2. Rap Back ID# %3 has been restored to its previous state	3	The action that is to be restored; e.g. expunge, consolidation, deletion.	UCN (for which the action was reversed, can be killed or kept UCN during consolidation)	RBSI

Table M-1 Transaction Message

Code	Condition for Message	Description	Count	Insert #1	Insert #2	Insert #3
RB018	Criminal Retain Submissions	Criminal arrest received from CRI – %1: Date of Arrest %2	2	CRI	DOA	
RB019	Dispositions	Court Disposition received from CRI - %1: Date of Arrest %2	2	CRI	DOA	
RB020	Civil Retain	Civil Event received from CRI - %1: Date of Receipt %2	2	CRI	Date of Civil Event receipt in the form CCYYMMDD	
RB021	Expungement / Partial Expungement	Expungement of Criminal Arrest from CRI - %1: Date of Arrest %2	2	CRI	DOA	
RB022	Want Addition	NCIC Wanted Person entry from ORI - %1: NIC/%2, Date of Warrant %3	3	ORI	NCIC number	Date of Warrant in the form CCYYMMDD
RB023	Want Deletion	NCIC Wanted Person deletion from ORI - %1: NIC/%2, Subject no longer wanted by agency	2	ORI	NCIC number	
RB024	Want Modification	NCIC Wanted Person modification from ORI - %1: NIC/%2, Date of Warrant %3	3	ORI	NCIC number	Date of Warrant in the form CCYYMMDD
RB025	Sexual Offender Registry Addition	Sexual Offender Registry entry from ORI - %1:NIC/%2, Date of Registration %3	3	ORI	NCIC number	Date of Registration in the form CCYYMMDD
RB026	Sexual Offender Registry Deletion	Sexual Offender Registry deletion from ORI - %1:NIC/%2, Subject no longer registered with agency.	2	ORI	NCIC number	
RB027	Sexual Offender Registry Modified	Sexual Offender Registry modification from ORI - %1:NIC/%2, Date of Registration %3	3	ORI	NCIC number	Date of Registration in the form CCYYMMDD
RB028	External	External System Activity received from ORI - %1:%2	2	ORI	Date of Activity in the form CCYYMMDD	
RB029	Rap Back Subscription List Request returns no subjects	No Rap Back subscriptions are enrolled for CRI %1	1	CRI		

Table M-1 Transaction Message

Code	Condition for Message	Description	Count	Insert #1	Insert #2	Insert #3
RB030	The Rap Back element has invalid data.	Rap Back Element %1, with value of [%2] contains invalid data.	2	Element Name	Element Value	
RB031	The Rap Back Maintenance Request has invalid data.	The Rap Back Maintenance request contains invalid data, %1, in field %2	2	Element Value	Element Name	
S0002	General segment error	A general segment error was detected that is not currently defined. Optional error message: %1 %2 %3.	0-3	Free Text	Free Text	Free Text
W0002	Manual Arrest Records	The Criminal History of subject %1 is contained in the FBI manual files	1	FNU		
W0003	Unassigned FBI Number	Subject %1 may be in the FBI manual files, but does not exist in the Criminal History Files.	1	FNU		

Note: For legacy purposes, this table uses UCN and FBI as interchangeable terms for the FBI Number/UCN.

* These error messages will include a formatted response reflecting “Candidate(s) were found. Please resubmit a new set of fingerprints for comparison to the candidate(s).” when a candidate was associated with the submission.

Appendix N: Descriptors And Field Edit Specifications For Type-14 Logical Records

Appendix N presents the descriptors and field specifications for Type-14 logical records, defined by ANSI/NIST-ITL as a Variable Resolution Fingerprint Image Record. In the past, only 4-4-2 slap impressions were allowed in the Type-14. NGI has expanded the use of the Type-14 to include available images as described in the ANSI/NIST-ITL. These new images consist of fingerprints (rolled and plain), supplemental palm prints and fingerprint images. Therefore it is necessary to add a new user-defined field to indicate the image set to which the image being transmitted belongs (e.g., are the rolled fingerprint impressions from a tenprint card or a palm print card). The new user-defined field, Image Source, is defined below. See Appendix P for a complete definition of each of the image sets. The Data Dictionary in this appendix has been organized to display Identifier, Field Number, Field Name, and Field Description.

As NGI will be accepting images as defined in the ANSI/NIST-ITL, refer to the ANSI/NIST-ITL for complete definitions of the fields that are allowed in the Type-14.

NIST Quality Metric (NQM 14.022) has been deprecated. All new CJIS users are required to populate the Fingerprint Quality Metric field (FQM 14.024) instead.

When submitting Type-14 records, the Type-2 AMP field should be used to indicate when there is an image missing (e.g., an entire slap). The Type-14 AMP field should be used to indicate a missing finger within an image (e.g., a missing index finger in a slap image).

Type-14 Data Dictionary

The Type-14 Data Dictionary for this appendix only includes those fields that have been constrained by NGI/CJIS functionality. All other fields defined in the ANSI/NIST-ITL will be used as defined in that standard.

ISC 14.200 Image Source Code

This optional numeric field indicates to which source the included image belongs. This field allows images from multiple biometric sets that use the same Record Type to be distinguishable.

Table 48 ISC Values Table

Image Source	Value
Tenprint Fingerprint Set	1
Palm Print Set – Front of Card (including fingers on front)	2
Palm Print Set – Fingers on Back of Card	3
Supplemental Print Set	4

Two different values are used for the Palm Print card to distinguish between the index finger image on the front of the card and the index finger that is part of the set of five finger images on the back of the card.

SLC 14.008 Scale Units

This field will be used to define image sampling frequency (pixel density). A value of “1” shall indicate pixels per inch. A value of “2” shall indicate pixels per centimeter. A value of “0” in this field indicates that no scale is provided, and NGI will reject transactions containing this value.

FGP 14.013 Friction Ridge Generalized Position

This mandatory field indicates which friction ridge position is to be associated with the attached image of this record. NGI will restrict the valid values for Friction Ridge Generalized Position, 14.013 FGP, to 1 – 15 and 19. When the value of ‘19’ is present, then 14.014 PPD and 14.015 PPC must be present.

PPD 14.014 Print Position Descriptors

This field is mandatory when 14.013 FGP is ‘19’.
This field will consist of two mandatory information items:

- The first is the probable integer finger position code (0-10) taken from finger position table.
- The second information item is the code taken from Table P-1, found in Appendix P, to indicate the portion of the EJI or tip image that is a part of the transaction.

PPC 14.015 Print Position Coordinates

This field is mandatory when 14.013 FGP is '19'.
This field contains repeating sets of offsets to the locations for each of the full finger views within an EJI, and/or segments within a finger view. This field shall consist of six (6) mandatory information items to describe the type of image and its location within an EJI. This information will describe either the location of the entire joint image, one full finger view, or segment. Individual full finger or segment definitions may be repeated as repeating sets of information items:

- The first information item is the code for the full finger view, values 'FV1' to 'FV4'. Values 'FV1' to 'FV4' specify the perspective for each full finger view. For a fingertip, the first information item shall be 'TIP'. Full finger view will contain the code "NA" if only a proximal, distal or medial segment is available.
- The second information item is used to identify the location of a segment within a full finger view. It will contain the code value 'NA' if the image portion refers to either a full finger view, tip, or to the entire joint image locations. Otherwise, it shall contain 'PRX', 'DST', or 'MED' for a proximal, distal, or medial segment, respectively.
- The third information item contains the left horizontal offset in pixels to the left edge of the bounding box relative to the origin position of the upper left corner of the image.
- The fourth information item contains the right horizontal offset in pixels to the right edge of the bounding box relative to the origin position of the upper left corner of the image.
- The fifth information item contains the top vertical offset (pixel counts down) to the top of the bounding box.
- The sixth information item contains the bottom vertical offset in pixels from the upper left corner of the image down to the bottom of the bounding box.

The maximum occurrences of this field is 12. For EJI images, all finger segment (i.e., distal, medial, proximal) coordinates for all available finger views must be specified within the Type-14 record. Using this provided information, the finger views will be calculated at enrollment time as the rectangles encapsulating all segments from a particular finger view. This obviates the need for the contributor to explicitly specify the finger view coordinates. Please note that an EJI image from a thumb only has two segments - distal and proximal.

ASEG 14.025 Alternate Finger Segment Position(s)

This optional field is an alternate approach to describing the locations for each of the image segments of each of the individual fingers within a flat image containing the capture of four (or more if extra digits exist on the hand) simultaneous fingers or two simultaneous thumbs. Where SEG, 14.021, uses a straight box for this segmentation, ASEG allows for more of a polygon shape of segmentation. For submitting this field for NGI/CJIS, the user must include exactly 4 vertices of the polygon in sequential order with the first vertex being of the upper left point and continuing in a clockwise manner. The vertices must be within the bounds of the flat image and no two vertices may occupy the same location. The polygon shall be a four-cornered shape with no sides crossing.

Appendix O: Place Of Birth (POB) Code Table

Appendix O contains the codes for Place of Birth (POB 2.020), Citizenship (CTZ 2.021) and Geographic Area of Search (GEO 2.044) fields. These codes are taken from the State and Country Data Codes within the NCIC Code Manual. The 'CTZ' contains an asterisk (*) for those codes that are valid for usage in the CTZ 2.021 field. All codes are valid for usage in the POB 2.020 field and the GEO 2.044 field. The "DATE AHEAD FLAG" indicates those codes where the local date may be a day ahead of North American time zones.

Table O-1 POB Code Table

CODE	CTZ	DESCRIPTION	DATE AHEAD FLAG
AA	*	Albania	
AB		Alberta (Canadian Province)	
AC	*	Africa	
AD	*	Andorra	
AE		Anguilla	
AF	*	Afghanistan	*
AG		Aguascalientes (Mexican State)	
AH		Ashmore/Cartier Islands	
AI	*	Antigua and Barbuda (formerly Antigua)	
AJ	*	Aruba	
AK		Alaska	
AL		Alabama	
AM		American Samoa (Islands)	
AN	*	Algeria	
AO	*	Angola	
AP	*	Armenia	
AQ	*	Azores Islands	
AR		Arkansas	
AS	*	Australia	*
AT	*	Argentina	*
AU	*	Austria	*
AV	*	Azerbaijan	
AW	*	St Kitts/Nevis/Anguilla	
AX		Apache Tribe	
AY	*	Antarctica	
AZ		Arizona	
BA		Baja California (Northern Section) (Mexican State)	
BB	*	Barbados	*
BC		British Columbia (Canadian Province)	
BD	*	Bahamas, The	*
BE	*	Bahrain (Bahrein)	
BF		Bassas Da India	
BG	*	Belgium	*
BH	*	Belize (British Honduras)	
BI	*	Burundi	

Table O-1 POB Code TFble

CODE	CTZ	DESCRIPTION	DATE AHEAD FLAG
BJ		Baja California (Southern Section) (Mexican State)	
BK		Baker Island	
BL	*	Bangladesh	
BM		Bermuda	
BN	*	Bhutan	
BO		British Indian Ocean Territory	
BP	*	Bosnia (Hercegovenia, for Reference only)	
BQ		Bouvet Island	
BR	*	Burma	*
BS	*	British Solomon Islands(Solomon Islands)	
BT	*	Botswana	
BU	*	Bulgaria	
BV	*	Bolivia	*
BW	*	Balearic Islands	
BX	*	Brunei	
BY	*	Belarus	
BZ	*	Brazil	*
CA		California	
CB	*	Colombia	
CC	*	Cuba	
CD	*	Canada	
CE		Campeche (Mexican State)	
CF	*	Chad	
CG		Caroline Islands	
CH		Chihuahua (Mexican Border State)	
CI		Chiapas (Mexican State)	
CJ	*	Cambodia (Kampuchea)	
CK	*	Czechoslavakia	
CL		Colima (Mexican State)	
CM	*	Cameroon	
CN	*	China	
CO		Colorado	
CP		Cayman Islands	
CQ	*	Chile	*
CR	*	Costa Rica	
CS	*	Cyprus	*

Table O-1 POB Code Table

CODE	CTZ	DESCRIPTION	DATE AHEAD FLAG
CT		Connecticut	
CU		Coahuila (Mexican State)	
CV	*	Cape Verde Islands	
CW	*	Central African Republic	
CX	*	Congo	
CY	*	Ceylon (now Sri Lanka)	
CZ		Canal Zone (United States)	
DA		Cheyenne & Arapaho Tribes	
DB		Clipperton Island	
DC		Dist of Columbia	
DD		Cocos (Keeling) Islands	
DE		Delaware	
DF		Distrito Federal (Mexico, D.F.)	
DG	*	Comoros, Fed Islamic Rep	
DH	*	Benin (formerly Dahomey)	
DI	*	Cook Islands	
DJ		Coral Sea Islands	
DK	*	Denmark	*
DL		Devils Lake Sioux Tribe	
DM	*	Dominica	
DN	*	Djibouti	
DO		Durango (Mexican State)	
DQ		Ak Chin Indian Community of Maricopa Indian Rsvn, AZ	
DP		Comanche Nation	
DR	*	Dominican Rep	*
DS		Miami Tribe	
DT		Muscogee (Creek Tribe)	
DU	*	Ducie Islands	
DV		Seneca-Cayuga Tribes	
DW		Citizen Potawatomi Nation	
DX		Alabama-Coushatta Tribes of TX	
DY		Alabama-Quassarte Tribal Town, OK	
DZ		Arapahoe Tribe of the Wind River Rsvn, WY	
EA		Aroostook Band of Micmac Indians of ME	
EB		Bay Mills Indian Community, MI	
EC		Blackfeet Tribe of the Blackfeet Indian Rsvn of MT	

Table O-1 POB Code Table

CODE	CTZ	DESCRIPTION	DATE AHEAD FLAG
ED		Burns Paiute Tribe of the Burns Paiute Indian Colony of OR	
EE		Absentee Shawnee	
EF		Cayuga Nation of NY	
EG		Cheyenne River Sioux Tribe of the Cheyenne River Rsvn, SD	
EH		Chickasaw Nation, OK	
EI		Chippewa-Cree Indians of the Rocky Boy's Rsvn MT	
EJ		Chitimacha Tribe of LA	
EK	*	Equatorial Guinea	
EL	*	El Salvador	
EM	*	East Germany	
EN	*	England	*
EO	*	Ethiopia	
EP		Cocopah Tribe of AZ	
EQ		Coeur D'Alene Tribe of the Coeur D'Alene Rsvn, ID	
ER		Europa Island	
ES	*	Estonia	
ET	*	Eritrea	
EU	*	Ecuador	
EV		Colorado River Indian Tribe of CO River Indian Rsvn, AZ&CA	
EW		Confederated Tribes of the Chehalis Rsvn, WA	
EX		Confederated Tribes of the Colville Rsvn, WA	
EY	*	Egypt	*
EZ	*	Czech Republic	
FA		Falkland Islands	
FB		Confederated Tribes of the Goshute RSVN, NV and UT	
FC		Fond du Lac	
FD	*	Finland	
FE		Confederated Tribes of the Umatilla Rsvn, OR	
FF		Confederated Tribes of the Warm Springs Rsvn of OR	
FG		French Guiana	
FH		Coushatta Tribe of LA	
FJ	*	Fiji Islands	
FK		Crow Creek Sioux Tribe of the Crow Creek Rsvn, SD	
FL		Florida	
FM		Crow Tribe of MT	
FN	*	France	*

Table O-1 POB Code Table

CODE	CTZ	DESCRIPTION	DATE AHEAD FLAG
FO	*	Faroe Islands	
FP		French Polynesia	
FQ		Eastern Band of Cherokee Indians of NC	
FR		French Southern and Antarctic Lands	
FS	*	Fed States of Micronesia	
FT		Eastern Shosone Tribe WY	
FU		Ely Shosone Tribe of NV	
FV		Paiute-Shosone Tribe of the Fallon Rsvn and Colony, NV	
FW		Flandreau Santee Sious Tribe of SD	
FX		Sac and Fox	
FY		Fort Belknap Indian Community of Fort Belknap Rsvn of MT	
FZ		Fort McDowell Yavapai Nation, AZ	
GA		Georgia	
GB	*	Gabon	
GC	*	Greece	*
GD	*	Georgia/Gruzinskaya	
GE	*	Germany (Also see EM and WG)	*
GF		Guernsey	
GG	*	Ghana	
GI	*	Guinea	
GJ	*	Grenada	
GK	*	Gambia	
GL	*	Gilbert and Ellice Islands	
GM		Guam	*
GN	*	Greenland	
GO		Glorioso Islands	
GP		Guadeloupe	
GQ		Fort Mojave Indian Tribe of AZ, CA & NV	
GR		Guerrero (Mexican State)	
GS	*	S Georgia/S Sandwich Isl	
GT	*	Guatemala	
GU		Guanajuato (Mexican State)	
GV		Assiniboine and Sioux Tribes of Fort Peck Indian Rsvn, MT	
GX		Gila River Indian Community of Gila River Indian Rsvn, AZ	
GY	*	Guyana (Includes French Guiana)	
GZ	*	Gaza	

Table O-1 POB Code Table

CODE	CTZ	DESCRIPTION	DATE AHEAD FLAG
HB		Grand Traverse Band of Ottawa and Chippewa Indians, MI	
HC	*	Hercegovena	
HD	*	Honduras	
HE		Heard Isl/McDonald Isl	
HF		Hannahville Indian Community, MI	
HG		Havasupai Tribe if the Havasupai Rsvn, AZ	
HI		Hawaii	
HJ		Hoh Indian Tribe of the Hoh Indian Rsvn, WA	
HK	*	Hong Kong	*
HL		Hidalgo (Mexican State)	
HM		Hopi Tribe of Arizona	
HN	*	New Hebrides (now Vanuata)	
HO		Howland Island	
HP		Hualapai Indian Tribe of Hualapai Indian Rsvn, AZ	
HQ		Iowa Tribe of KS & NB	
HR		Christmas Island	
HS		Saint Helena	
HT	*	Haiti	
HU	*	Hungary	
HW		Jamestown S'Klallam Tribe of WA	
HX		Jena Band Choctaw Indians, LA	
HZ		Jicarilla Apache Nation, NM	
IA		Iowa	
IB		Man, Isle of	
IC	*	Iceland	
ID		Idaho	
IE	*	Ireland	
IF		Kaibab Band of Paiute Indians of the Kaibab Indian Rsvn, AZ	
IG		Kalispel Indian Community of Kalispel Indian Rsvn WA	
IH		Kaw Nation, OK	
II	*	India	*
IK		Keweenaw Bay Indian Community, MI	
IL		Illinois	
IM		Madeira Islands	
IN		Indiana	
IO	*	Indonesia	

Table O-1 POB Code Table

CODE	CTZ	DESCRIPTION	DATE AHEAD FLAG
IP		Internat License	
IQ	*	Iraq	
IR	*	Iran	
IS	*	Israel	
IT	*	Italy	*
IU	*	Niue	
IV		Kickapoo Tribe of Indians of the Kickapoo Rsvn in KS	
IW		Iowa Tribe	
IX		Menominee Indian Nation	
IY	*	Cote dIvoire (Ivory Coast)	
IZ		Kotenai Tribe of ID	
JA	*	Japan	*
JB		Lac Vieux Desert Band of Lake Superior Chippewa Indians, MI	
JD		Little River Band of Ottawa Indians, MI	
JE		Jersey	
JF		Little Traverse Bay Bands of Odawa Indians, MI	
JG		Lovelock Paiute Tribe of the Lovelock Indian Colony, NV	
JH		Lower Brule Sioux Tribe of the Lower Elwha Rsvn, WA	
JI		Johnston Island	
JJ		Lower Elwha Tribal Community of the Lower Elwha Rsvn, WA	
JK		Lummi Tribe of the Lummi Rsvn, WA	
JL		Jalisco (Mexican State)	
JM	*	Jamaica	*
JN		Jan Mayen	
JO	*	Jordan	
JP		Makah Indian Tribe of the Makah Indian Rsvn, WA	
JQ		Mashantucket Pequot Tribe of CT	
JR		Jarvis Island	
JS		Match-E-Be-Nash-She-Wish Band of Pottawatomie Indians of MI	
JT		Mescalero Apache Tribe of the Mescalero Rsvn, NM	
JU	*	Juan de Nova Island	
JV		Metlakatla Indian Community, Annette Island AK	
JW		Miccosukee Tribe of Indians, FL	
JX		Missisippi Band of Choctaw Indians	
JY		Muckleshoot Indian Tribe of the Muckleshoot Rsvn, WA	
JZ		Narragansett Indian Tribe of RI	

Table O-1 POB Code Table

CODE	CTZ	DESCRIPTION	DATE AHEAD FLAG
KB	*	Gilbert Islands (now Kiribati)	
KC	*	Croatia	
KD		Navajo Nation, AZ, NM and UT	
KE	*	Kenya	
KF		Nez Perce Tribe, ID (Frmrly Listed Nez Perce Tribe of ID)	
KG		Nisqually Indian Tribe of the Nisqually Rsvn, WA	
KH	*	Manahiki Island	
KI		Kingman Reef	
KJ		Nooksack Indian Tribe of Washington	
KK		Kickapoo Tribe	
KL		Northern Cheyenne Tribe of the North. Chey. Indian Rsvn, MT	
KM		Nottawaseppi Huron Band of Potawatomie, MI- Frmr Hur. Pot., Inc.	
KN	*	North Korea	*
KO	*	South Korea	*
KP		Shakopee	
KQ		Ohkay Owingeh, NM (Foremerly the Pueblo of San Juan)	
KS		Kansas	
KT	*	Kazakhstan	
KU	*	Kuwait	
KV	*	Kosovo	
KW		Kiowa	
KX		Omaha Tribe of NB	
KY		Kentucky	
KZ	*	Kyrgyzstan	
LA		Louisiana	
LB	*	Liberia	
LC		Mille Lacs	
LD	*	Moldova	
LE	*	Lesotho	
LF	*	Slovakia	
LG		Onondaga Nation of NY	
LH	*	Lithuania	
LI	*	Liechtenstein	
LJ		Pascua Yaqui Tribe of AZ	
LK		Passamaquoddy Tribe of ME	
LL		Leech Lake Band of Chippewa	

Table O-1 POB Code Table

CODE	CTZ	DESCRIPTION	DATE AHEAD FLAG
LM		Penobscot Tribe of ME	
LN	*	Lebanon	
LO	*	Slovenia	
LP		Lac du Flambeau	
LQ		Poarch Band of Creek Indians of AL	
LR		Pokagon Band of Potawatomi Indians, MI & IN	
LS	*	Laos	*
LT	*	Latvia	
LU	*	Saint Lucia	
LV		Port Gamble of Indian Community of the Port Gamble Rsvn, WA	
LW		Prairie Band of Potawatomi Nation, KS	
LX	*	Luxembourg	
LY	*	Libya	
LZ		Pueblo of Acoma, NM	
MA		Massachusetts	
MB		Manitoba (Canadian Province)	
MC		Michoacan (Mexican State)	
MD		Maryland	
ME		Maine	
MF	*	Malawi	
MG	*	Mongolia	
MH		Marshall Islands	
MI		Michigan	
MJ	*	Monaco	
MK		Mariana Islands (U.S. Trust Territory-U.S.)	
ML	*	Mali	
MM	*	Mexico	
MN		Minnesota	
MO		Missouri	
MP	*	Madagascar (included in Malagasy Republic)	
MQ	*	Morocco	
MR		Morelos (Mexican State)	
MS		Mississippi	
MT		Montana	
MU	*	Mauritania	
MV	*	Maldives	

Table O-1 POB Code Table

CODE	CTZ	DESCRIPTION	DATE AHEAD FLAG
MW		Midway Islands	
MX		Mexico (Mexican State)	
MY	*	Malta	
MZ	*	Malaysia	*
NA		Nayarit (Mexican State)	
NB		Nebraska	
NC		North Carolina	
ND		North Dakota	
NE	*	Holland (Netherlands)	*
NF	*	Newfoundland (Includes Labrador; Canadian Province)	
NG	*	Nigeria	*
NH		New Hampshire	
NI		Northern Ireland	
NJ		New Jersey	
NK		New Brunswick (Canadian Province)	
NL		Nuevo Leon (Mexican State)	
NM		New Mexico	
NN	*	Niger	
NO	*	New Guinea (now Papua New Guinea)	
NP	*	Nepal	
NQ		New Caledonia	
NR	*	Nauru	
NS		Nova Scotia (Canadian Province)	
NT		Northwest Territories (Canadian Admin. Division)	
NU	*	Nicaragua	
NV		Nevada	
NW	*	Norway	
NX	*	Bonaire (Netherlands Antilles)	
NY		New York	
NZ	*	New Zealand	
OA		Oaxaca (Mexican State)	
OB		Pueblo of Cochiti, NM	
OC	*	Macao (Macau)	
OD		Pueblo of Isleta, NM	
OE		Pueblo of Jemez, NM	
OF		Norfolk Island	

Table O-1 POB Code Table

CODE	CTZ	DESCRIPTION	DATE AHEAD FLAG
OG		Osage Nation	
OH		Ohio	
OI		Okinawa	
OJ		Pueblo of Laguna, NM	
OK		Oklahoma	
OL		Pueblo of Nambe, NM	
OM	*	Oman	
ON		Ontario (Canadian Province)	
OO		Otoe-Missouria Tribe	
OP		Pueblo of Picuris, NM	
OQ		Pueblo of San Felipe, NM	
OR		Oregon	
OS		Oglala Sioux	
OT		Oneida Tribe of Indians of Wisconsin	
OU		Pueblo of San Ildefonso, NM	
OV		Pueblo of Sandia, NM	
OW		Pueblo of Santa Ana, NM	
OX		Pueblo of Santa Clara, NM	
OY		Kewa Pueblo. NM (Formerly Pueblo of Santa Domingo, NM)	
OZ		Oneida Nation of NY	
PA		Pennsylvania	
PB		Puebla (Mexican State)	
PC		Pitcairn, Henderson, Ducie, and Oeno Island	
PD	*	Republic of Palau	
PE		Prince Edward Island (Canadian Province)	
PF	*	Paracel Islands	
PG	*	Guinea-Bissau (formerly Portuguese Guinea)	
PH		Pueblo of Taos, NM	
PI	*	Philippines	*
PJ		Pueblo of Tesuque, NM	
PK	*	Pakistan	*
PL		Palmyra Atoll	
PM	*	Panama	
PN		Ponca Tribe	
PO	*	Poland	
PP		Pueblo of Zia, NM	

Table O-1 POB Code Table

CODE	CTZ	DESCRIPTION	DATE AHEAD FLAG
PQ		Quebec (Canadian Province)	
PR		Puerto Rico	*
PS		St Pierre and Miquelon	
PT	*	Portugal	
PU	*	Peru	
PV	*	Paraguay	*
PW		Pawnee Tribe	
PX		Pueblo of Zuni, NM	
PY		Puyallup Tribe of the Puyallup Rsvn, WA	
PZ		Pyramid Lake Paiute Tribe of the Pyramid Lake Rsvn, NV	
QA	*	Qatar	
QB		Quechan Tribe of the Fort Yuma Indian Rsvn CA & AZ	
QC		Quileute Tribe of the Quileute Rsvn, WA	
QD		Quinault Tribe of the Quinault Rsvn, WA	
QE		Reno-Sparks Indian Colony, NV	
QF		Rosebud Sioux Tribe of the Rosebud Indian Rsvn, SD	
QG		Sac and Fox Nation of Missouri in KS and NB	
QH		Sac and Fox Tribe of the MS in IA	
QI		Saginaw Chippewa Indian Tribe of MI	
QJ		St Regis Mohawk Tribe, NY- Frmr St Reg. Band Mohawk Indians	
QK		Salt River Pima-Maricopa Indian Comm. Of Salt River Rsvn, AZ	
QL		Samish Indian Tribe, WA	
QM		San Carlos Apache Tribe of the San Carlos Rsvn, AZ	
QN		Santee Sioux Nation, NB	
QO		Sauk- Suiattle Indian Tribe of WA	
QP		Sault Sainte Maire Tribe of Chippewa Indians of MI	
QQ		Seminole Tribe of FL-Dan, Big Cyp, Brghtn, Hllywd & Tmp Rsvns	
QR		Quintana Roo (Mexican State)	
QS		Seneca Nation of New York	
QT		Shoalwater Bay Tribe of the Shoalwater Bay Indian Rsvn, WA	
QU		Queretaro (Mexican State)	
QV		Shosone-Bannock Tribes of the Fort Hall Rsvn of ID	
QW		Shosone-Paiute Tribes of the Duck Valley Rsvn of NV	
QX		Sisseton-Wahpeton Oyate of the Lake Traverse Rsvn, SD	
QY		Skokomish Indian Tribe of the Skokomish Rsvn, WA	
QZ		Skull Valley Band of Goshute Indians of UT	

Table O-1 POB Code Table

CODE	CTZ	DESCRIPTION	DATE AHEAD FLAG
RA	*	Russia	
RB	*	Republic of Congo, Brazzaville	
RC	*	Peoples Republic of China	*
RD		Snoqualmie Tribe, WA	
RE		Reunion	
RF		Russian Federation	*
RG		Gibraltar	
RH	*	Rhodesia (now Zimbabwe)	
RI		Rhode Island	
RJ		Southern Ute Indian Tribe of CO	
RK		Spirit Lake Tribe of the Spokane Rsvn, WA	
RL		Red Lake	
RM		Spokane Tribe of the Spokane Rsvn, WA	
RN		Squaxin Island Tribe of Squaxin Island Rsvn, WA	
RO		Standing Rock Sioux Tribe of North & South Dakota	
RP		Summit Lake Paiute Tribe of NV	
RQ		Suquamish Indian Tribe of the Port Madison Rsvn, WA	
RR		Montserrat	
RS	*	Spanish Sahara (now Western Sahara)	
RT		Swinomish Indians of the Swinomish Rsvn, WA	
RU	*	Romania/Rumania	
RV	*	Socialist Republic of Vietnam	*
RW	*	Rwanda	
RX		Te-Moak Tribe of W. Shosone Indians of NV	
RY	*	Republic of Yemen	
RZ		Three Affiliated Tribes of the Fort Berthold Rsvn, ND	
SA	*	Sierra Leone	
SB	*	Saudi Arabia	
SC		South Carolina	
SD		South Dakota	
SE	*	Seychelles	
SF	*	South Africa	*
SG	*	Senegal	
SH	*	San Marino	
SI		Sinaloa (Mexican State)	
SJ	*	South-Wst Africa (Namibia)	

Table O-1 POB Code Table

CODE	CTZ	DESCRIPTION	DATE AHEAD FLAG
SK		Seminole Nation	
SL		San Luis Potosi (Mexican State)	
SM	*	Somalia	
SN		Saskatchewan (Canadian Province)	
SO		Sonora (Mexican State)	
SP	*	Spain	*
SQ	*	Sweden	
SR	*	Singapore	*
SS	*	Scotland	
ST	*	People's Democratic Republic of Yemen	
SU	*	Sudan	
SV		Svalbard	
SW	*	Swaziland	
SX	*	Soviet Union (USSR/Russia)	
SY	*	Syria	
SZ	*	Switzerland	*
TA		Tamaulipas (Mexican State)	
TB		Tabasco (Mexican State)	
TC	*	Trucial States (now United Arab Emirates)	
TD		Trust Territory of Pacific Islands	
TE	*	Spratly Islands	
TF	*	Tuamontu Archipelago	
TG	*	Tonga	
TH	*	Thailand	*
TJ	*	Tajikistan	
TK		Tokelau	
TL		Tlaxcala (Mexican State)	
TM		Tromelin Island	
TN		Tennessee	
TO	*	Togo	
TP	*	Sao Tome and Principe	
TQ	*	Tongareva	
TR		Turks and Caicos Islands	
TS	*	Nevis and Saint Christopher Kitts	
TT	*	Trinidad / Tobago	*
TU	*	Tunisia	

Table O-1 POB Code Table

CODE	CTZ	DESCRIPTION	DATE AHEAD FLAG
TV	*	Ellice Islands (now Tuvalu)	
TW	*	Taiwan, Republic of China	
TX		Texas	
TY	*	Turkey	*
TZ	*	Tanzania, United Republic of	
UA	*	United Arab Rep	
UB		Tohono O'OOdham Nation of AZ	
UC		Turtle Mt Bnd of Chipewa	
UD		Tonawanda Band of Seneca Indians of NY	
UE		Tonkawa Tribe of Indians of OK	
UF		Tonto Apache Tribe of AZ	
UG	*	Uganda	
UH		Tulalip Tribes of the Tulalip Rsvn, WA	
UI		Yunica-Biloxi Indian Tribe of LA	
UJ		Tuscarora Nation of NY	
UK	*	Ukraine	
UL		Upper Skagit Indian Tribe of WA	
UM	*	Mauritius	
UN	*	United Kingdom	*
UO		Ute Indian Tribe of the Uintah & Ouray Rsvn, UT	
UP		Ute Mountain Tribe of the Ute Mountain Rsvn, CO, NM & UT	
UQ		Walker River Paiute Tribe of the Walker River Rsvn, NV	
UR	*	Turkmenistan	
US	*	United States	*
UT		Utah	
UU		Wampanoaq Tribe of Gay Head (Aquinnah) of MA	
UV	*	Burkina Faso/Upper Volta	
UW		Washoe Tribe of NV&CA-Carson, Drsslrvll,Woodfrds, Stewrt, Wash	
UX		White Mountain Apache Tribe of the Ft Apache Rsvn, AZ	
UY	*	Uruguay	
UZ	*	Uzbekistan	*
VA		Virginia	
VB		British Virgin Islands	
VC		Veracruz (Mexican State)	
VD		Winnebago Tribe of NB	

Table O-1 POB Code Table

CODE	CTZ	DESCRIPTION	DATE AHEAD FLAG
VE		Wyandotte Nation, OK	
VF		Vakama Nation, OK	
VG		Yakton Sioux Tribe of SD	
VH		Yavapai-Apache Nation of the Camp Verde Indian Rsvn, AZ	
VI		U S Virgin Islands	*
VJ		Yavapai-Prescott Tribe of the Yavapai Rsvn, AZ	
VK		Yerington Paiute Tribe of Yerington Colony&Cambell Rnch, NV	
VL		Navassa Island	
VO		Yomba Shosone Tribe of the Yomba Rsvn, NV	
VP		Catawba Indian Nation, SC (AKA Catawba Tribe of SC)	
VQ		Confederated Salish&Kootenai Tribes of the Flathead Rsvn, MT	
VR		Conf. Tribes of the Coos, Lower Umpqua and Siuslaw Indians of OR	
VT		Vermont	
VU		Confederated Tribes of the Grand Ronde Community of OR	
VV	*	St. Vincent and the Grenadines	
VW		Confederated Tribes of Siletz Indians-OR(Conf. Tribes Siletz Rsvn)	
VX		Confederated Tribes & Bands of the Yakama Nation, WA	
VY		Vatican City	
VZ	*	Venezuela	*
WA		Washington	
WB	*	West Bank	
WC		Coquille Tribe of OR	
WD		Wyandotte Tribe	
WE		White Earth	
WF		Wallis and Futuna	
WH		Cow Creek Band of Umpqua Indians of OR	
WI		Wisconsin	
WJ		Cowlitz Indian TRIBE< WA	
WK		Wake Island	
WL	*	Wales	
WM		Duckwater Shosone Tribe of the Duckwater Rsvn, NV	
WN	*	West Indies	
WO		Forest County Potawatomi Community of WI	
WP		Fort McDermitt Paiute& Shosone Tribes of F.M. Indians Rsvn, NV & OR	

Table O-1 POB Code Table

CODE	CTZ	DESCRIPTION	DATE AHEAD FLAG
WQ		Fort Sill Apache Tribe of OK	
WR		Houlton Band of Maliseet Indians of ME	
WS	*	Western Samoa	
WT		Wichita Tribe	
WU		Kickapoo Traditional Tribe of TX	
WV		West Virginia	
WX		Klamath Tribes, OR	
WY		Wyoming	
WZ		Lac Courte Oreilles Band of Lake Superior Chippewa Indians, WI	
XA	*	Serbia	
XB	*	Montenegro	
XC		Bad River Band of Lake Superior Tribe of Chippewa Indians	
XD		Caddo Tribe	
XE		Cherokee Nation	
XF		Delaware Nation	
XG		Eastern Shawnee Tribe	
XH		Modoc Tribe	
XI		Ottawa Tribe	
XJ		Peoria Tribe	
XK		Quapaw Tribe	
XL		United Keetoowah Band of Cherokee Indians	
XM		Western Delaware Tribe	
XN		Nunavut (Canadian Territory)	
XO		Grand Portage Band of Lake Superior Chippewa	
XP		Bois Forte Band of Chippewa	
XQ		Delaware Tribe of OK	
XR		Las Vegas Tribe of Paiute Indians of Las Vegas Indian Clny, NV	
XS		Lower Sioux Indian Community in the State of MN	
XT		Mashpee Wampanoag Tribe of MA	
XU		Minnesota Chippewa Tribe, MN	
XV		Moapa Band of Paiute Indians of NV	
XW		Mohegan Indian Tribe of CT	
XX	*	Unknown	
XZ		Paiute Indian Tribe of UT	
YB		Ponca Tribe of NB	

Table O-1 POB Code Table

CODE	CTZ	DESCRIPTION	DATE AHEAD FLAG
YC		Prairie Band of Potawatomi Nation, KS	
YD		Prairie Island Indian Community in the State of MN	
YE	*	Yemen Arab Republic	
YF		Pueblo of Pojoaque, NM	
YG	*	Yugoslavia	
YH		Red Cliff Band of Lake Superior Chippewa Indians WI	
YI		St. Croix Chippewa Indians of WI	
YJ		San Juan Southern Paiute Tribe of AZ	
YK		Shakopee Mdewakanton Sioux Community of MN	
YL		Shawnee Tribe, OK	
YM		Shoshoe Tribe of the Wind River RSVN, WY	
YN		Sokaogon Chippewa Community, WI	
YO	*	Mayotte	
YP		Stockbridge Munsee Community, WI	
YQ		Stillaguamish Tribe of WA	
YR		Thlopthlocco Tribal Town, OK	
YS		Upper Sioux Community, MN	
YT		Yukon (Canadian Territory)	
YU		Yucatan (Mexican State)	
YV		Winnemucca Indian Colony of NV	
YW		Ysleta Del Sur Pueblo of Texas	
YX		Zuni Tribe of the Zuni RSVN, NM	
YY	*	Unlisted country (Any foreign country not included in the list)	
YZ		Northwestern Band of Shosoni Nation of UT (Washakie)	
ZA		Zacatecas (Mexican State)	
ZB	*	Martinique	
ZC	*	Suriname	
ZD	*	Macedonia	
ZE		Kialegee Tribe Town, OK	
ZF	*	South Sudan	
ZI	*	Canary Islands	
ZM	*	Zambia	
ZO	*	Mozambique	
ZR	*	Congo Kinshasa (now Zaire)	

Appendix P: Specifications For Transmitting Palm Prints And Supplemental Fingerprints

This appendix presents NGI transmission specifications for Type-14 and Type-15 logical records. The Type-14 image records contain variable resolution supplemental fingerprint image data and the Type-15 image records contain variable resolution palm print image data together with fixed and user-defined textual information fields pertinent to the digitized image. The complete description of the Type-14 and Type-15 record fields can be found in the ANSI/NIST-ITL standard. The scanning resolution is not specified for these record types. However, in all cases the scanning resolution used to capture the supplemental and a palm print image shall be at least as great as the minimum scanning resolution of 19.69 ppmm (500 ppi) as specified in Section 3.8.1 of this document, "Fingerprint Image Size Requirements".

When submitting supplemental fingerprints to NGI in the Type-14 record, the Entire Joint Image (EJI) image should contain at least the full FV1 or FV3 image along with the corresponding coordinates to be used in the verification process of the fingerprints submitted. "Best Practice" for submitting supplemental fingerprints is to submit the complete EJI image that includes FV1, FV2, FV3, and FV4 as defined in Table P-1.

Because not all friction ridge areas of the hand have overlap with the distal segment of the fingers (i.e., writer's palm, interdigital, thenar, lower palm, hypothenar), it is not possible for CJIS to positively verify that these friction ridge areas correspond to the associated identity. CJIS will attempt to segment the distal area of applicable palm and supplemental prints (i.e., full palm, upper palm, joints) that can be compared to the subject fingerprints. If segmentation fails or the subsequent 1:1 verification fails, then all palm and supplemental records submitted within the transaction will be rejected as possibly being from the incorrect subject.

Palm print sets submitted to NGI in the Type-15 records shall include either:

1. Two full palm prints with the corresponding two writer's palms OR
2. An upper and lower palm from each hand with the corresponding two writer's palms

When submitting palm prints, the submission could also include rolled thenar, hypothenar, and grasp from each hand. The expectation with the receipt of known-subject palm prints is that the submitting agency has verified the palm print and/or supplemental belongs to the specified subject.

The entire area of the full palm is defined as that area extending from the wrist bracelet area to the tips of the fingers and can be represented as one or two scanned images. If two images are used to represent the full palm, the lower image shall extend from the wrist bracelet area to the top of the interdigital area (third finger joint) and shall include the thenar, and hypothenar areas of the palm. The upper image shall extend from the bottom of the interdigital area to the upper tips of the fingers. This provides an adequate amount of overlap between the two images to facilitate subject verification. By matching the ridge structure and details contained in the common interdigital area, an examiner can confidently state that both images came from the same palm. Because neither plain

impressions nor identification flat impressions include this common overlapping interdigital area, they should never be submitted as upper palm images. All friction ridge prints should be captured in as closely as possible to an upright position. Please see the NGI publication, "A Practical Guide for Palm Print Capture", available for download at https://www.fbibiospecs.cjis.gov/Document/Get?fileName=PalmGuidance%20v2.0%20LFSU.pdf, for additional guidance.

Tenprint Identification submissions may include palm prints and supplemental fingerprints. While the FBI/CJIS Division no longer accepts hard-copy biometric submissions, the standard card equivalents are noted here for users that continue to use the FBI standard cards to support capture/scanning within their individual programs. For the ANSI/NIST-ITL Friction Ridge Generalized Position (FGP) codes and maximum image sizes, see Table P-2.

Major Case Print Collection

FBI defines the Major Case Print Collection as a complete set of friction ridge exemplars that include:

- Ten rolled fingerprints (Type-4 for 500ppi or Type-14 for 1000ppi and above as captured on an FD-249 or FD-258)
- Standard four finger slaps for right and left hand in a Type-4/Type-14 record (FGP = 13 and 14 as captured on an FD-249 or FD-258)
- Individual thumb slaps for right and left hand in a Type-4/Type-14 record (FGP = 11 and 12 as captured on an FD-249 or FD-258)
- Tips of each finger in a Type-14 record (FGP = 19, Print Position Descriptors [14.014] = 'TIP' as captured on an FD-884a)
- Entire joint image for each finger in a Type-14 record (FGP = 19, Print Position Descriptors [14.014] = 'EJI' as captured on an FD-884a)
- Rolled joint, flat left, center, and right full finger for each finger in a Type-14 record (FGP = 19, Print Position Descriptors [14.014] = 'FV1' and 'FV2' and 'FV3' and 'FV4')
- Rolled Thenar for each hand in a Type-15 record (FGP = 32 and 25 as captured on an FD-884a)
- Full Palm for each hand in a Type-15 record (FGP = 21 and 23 as captured on an FD-884)
- Writer's Palm for each hand in a Type-15 record (FGP = 22 and 24 as captured on an FD-884)
- Five rolled fingerprints for each hand (Type-4 for 500ppi or Type-14 for 1000ppi and above as captured on an FD-884)

Fingerprint Image Sets

A full Tenprint Fingerprint image set consists of one of the following four options:

- 14 Type-4 Fingerprint image records (from the FD-249 or FD-258 card or a scanned equivalent)
  - Ten Rolled Fingerprint images
  - Two Four Finger Slap Fingerprint images
  - Two Flat Thumb Fingerprint images

- 3 Type-14 Fingerprint image records (identification flat images)
  Two Four Finger Slap Fingerprint images
  One Two-Thumb Slap Fingerprint image

- 13 Type-14 Fingerprint image records (Introduced for RPIS)
  Ten Rolled or Ten Flat Fingerprint images
  Two Four Finger Slap Fingerprint images
  One Two-Thumb Slap Fingerprint image

- 14 Type-14 Fingerprint image records (Introduced for RPIS)
  Ten Rolled or Ten Flat Fingerprint images
  Two Four Finger Slap Fingerprint images
  Two Flat Thumb Fingerprint images

NGI supports all four Fingerprint image sets defined above. To be considered a full Tenprint set, all images must be present or a designation that each missing finger is either amputated or unprintable is required. The FBI/CJIS prefers that contributors submit 1000ppi images with the Type-14.

Palm Print Image Sets

A Palm Print image set consists of all of the image blocks from an FD-884 card or a scanned equivalent. Each FD-884 card has images for one hand, so a Palm Print image set with images for both hands contains:

1-8 Type-15 Palm Print image records
- One Writer's Palm image from each hand AND
- Either:
  One Full Palm image from each hand OR
  One Upper Palm image and one Lower Palm image from each hand

0-12 Type-14 Fingerprint image records
- Five individual finger images from the back of the FD-884 card from each hand
- One individual index finger image from the front of the FD-884 card from each hand

Supplemental Print Image Sets

A Supplemental Print image set consists of all of the image blocks from an FD-884a card or a scanned equivalent. Each FD-884a card has images for one hand, so a Supplemental Print image set with images for both hands contains:

1-20 Type-14 Fingerprint image records
- 5 Entire Joint Image (EJI) Fingerprint images from each hand
- 5 Finger Tip Fingerprint images from each hand

0-2 Type-15 Palm Print image records

- 1 Thenar Region Palm Print image from each hand

With optional fingerprint images, no amputation or unprintable flags are needed for these records. Similarly, each EJI image can contain four different impressions of each finger as defined in EBTS, but there is no requirement for EJI images to contain all of the fingerprint impressions.

Figure 9 FBI Standard Fingerprint Card (FD-249)

Figure 10 and 11 contain the front and reverse sides of the FBI Standard Palm Print Card, FD-884.

Figure 10 FBI Standard Palm Print Card (FD-884) Front

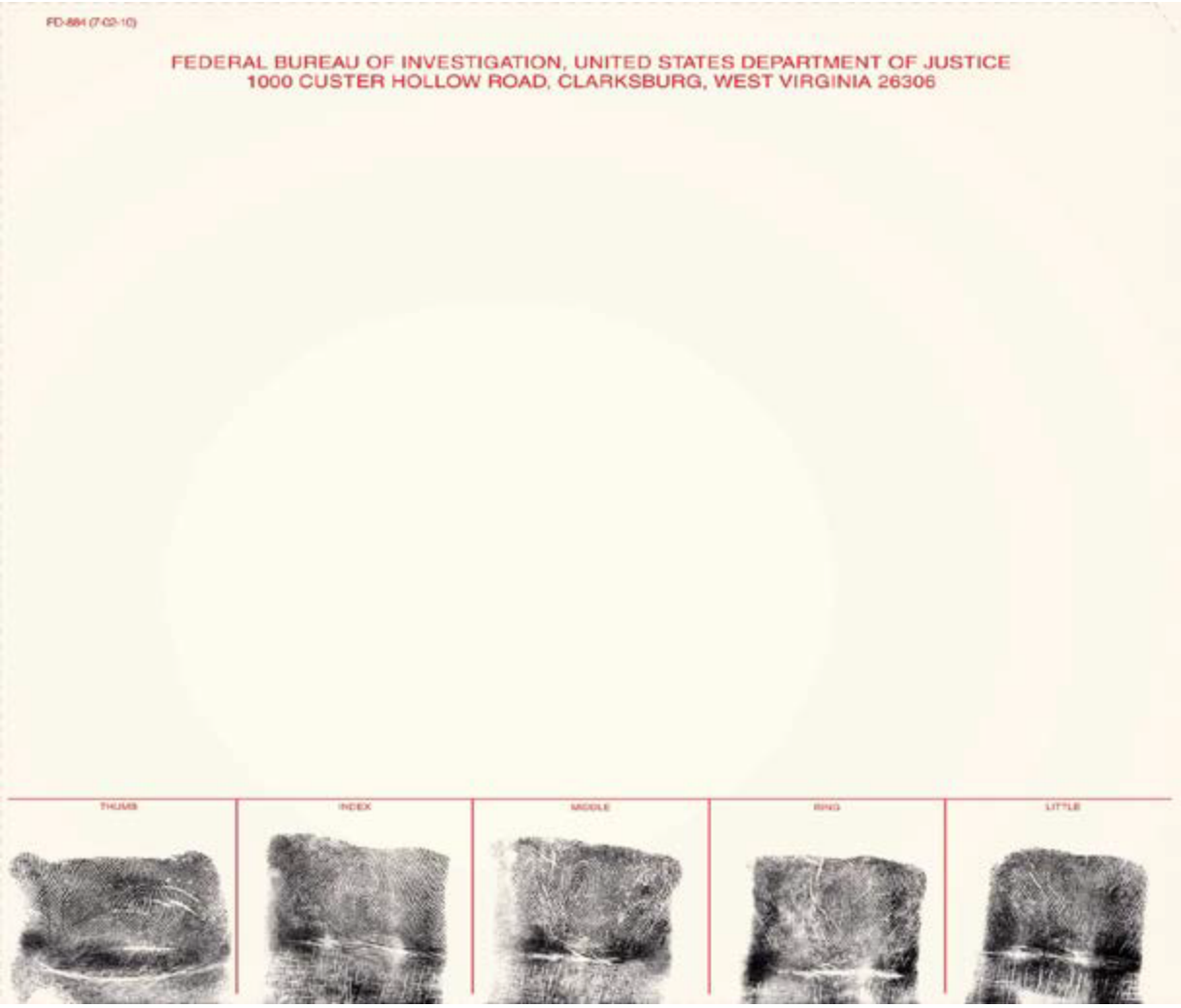

Figure 11 FBI Standard Palm Print Card (FD-884) Reverse

Figure 12 and 13 illustrate the FBI Standard Supplemental Finger/Palm Print Cards, FD-884a. It contains additional areas of friction ridge capture, including joint prints (distal, medial, and proximal), rolled finger tips, and rolled thenar area for each hand as shown in the images below.

Figure 12 New FBI Standard Supplemental Finger/Palm Print Card (FD-884a) - Front

Figure 13 New FBI Standard Supplemental Finger/Palm Print Card (FD-884a) - Reverse

The table below lists the finger image codes to be used in the Type-13 and -14 records.

Table P-1 Print Position Descriptor Code Table

Type of Print Image	Image Code
Entire Joint Image	EJI
Rolled Tip	TIP
Full Finger Rolled View	FV1
Full Finger Plain Image – left side	FV2
Full Finger Plain Image – center	FV3
Full Finger Plain Image – right side	FV4
Proximal, Distal, or Medial Segment	PRX, DST, MED

The types of print images are further defined as:

- Joint Prints (later broken down into distal, medial, and proximal)

  Rolled Joint Print: a single recording of the friction ridge skin on the distal, medial (except thumbs), and proximal areas of each finger. This type of impression is taken in one motion, similar to the taking of a rolled fingerprint impression.

- Rolled Tips

  A single recording of the friction ridge skin on the tip of the end joint of a finger. This type of impression is taken by placing the end joint of the finger on one side and rolling the finger across the tip such that the fingernail is in constant contact (or near constant contact) with the sheet of paper until the other side of the finger is reached.

- Rolled Thenar

  The large cushion of the palm located at the base of the thumb opposite of the Writer's Palm or Hypothenar.

The rolled joint segments are labeled in the image below, where image 1 is the rolled middle finger, 2 and 4 are the pressed sides of the middle finger, and 3 is the pressed surface of the middle finger.

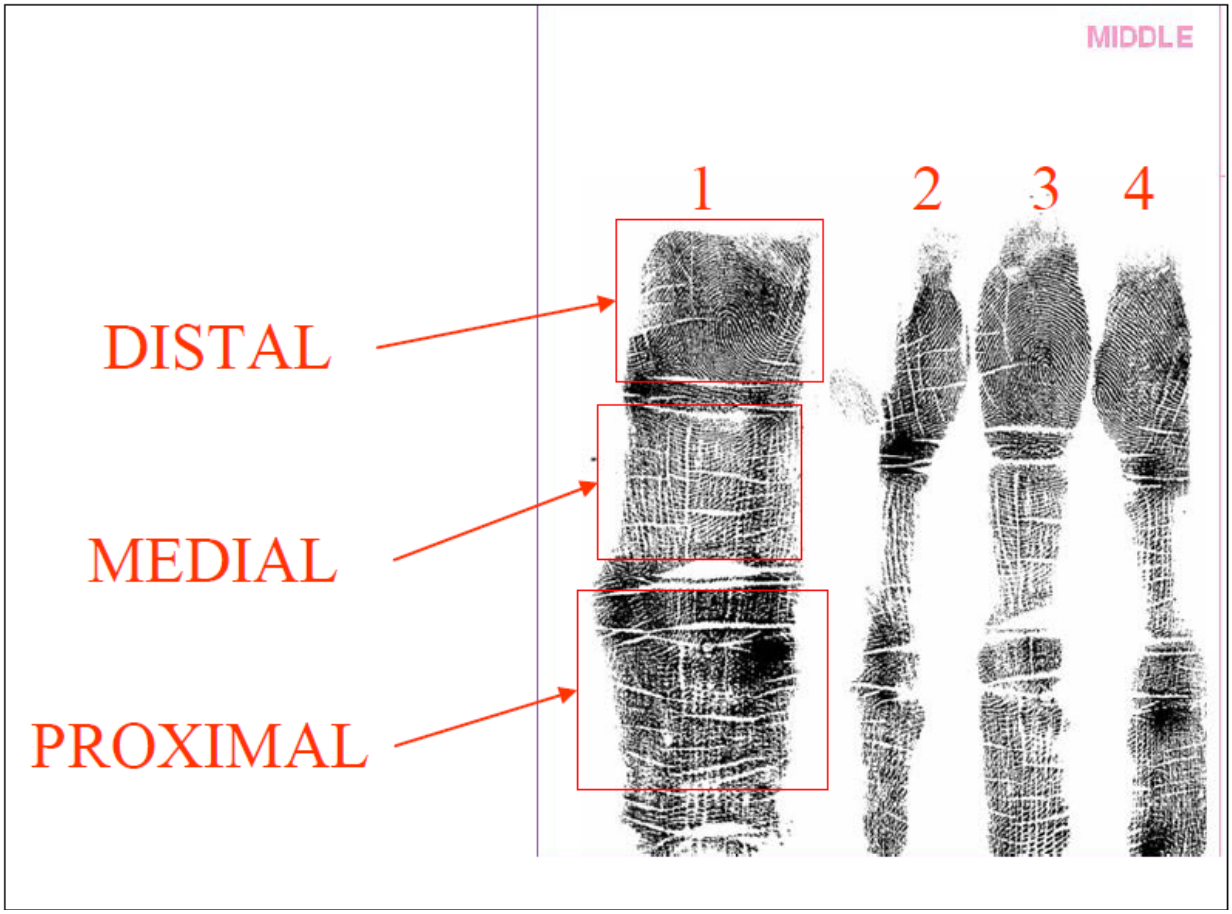

Figure 14 Distal, Medial and Proximal Joints

The image records of the Entire Joint Image (EJI) are contained in Type-14 records. Offsets to the locations of image segments containing the full finger view, proximal, distal, or medial areas are included with the image records further defined in the Type-14 record field specifications.

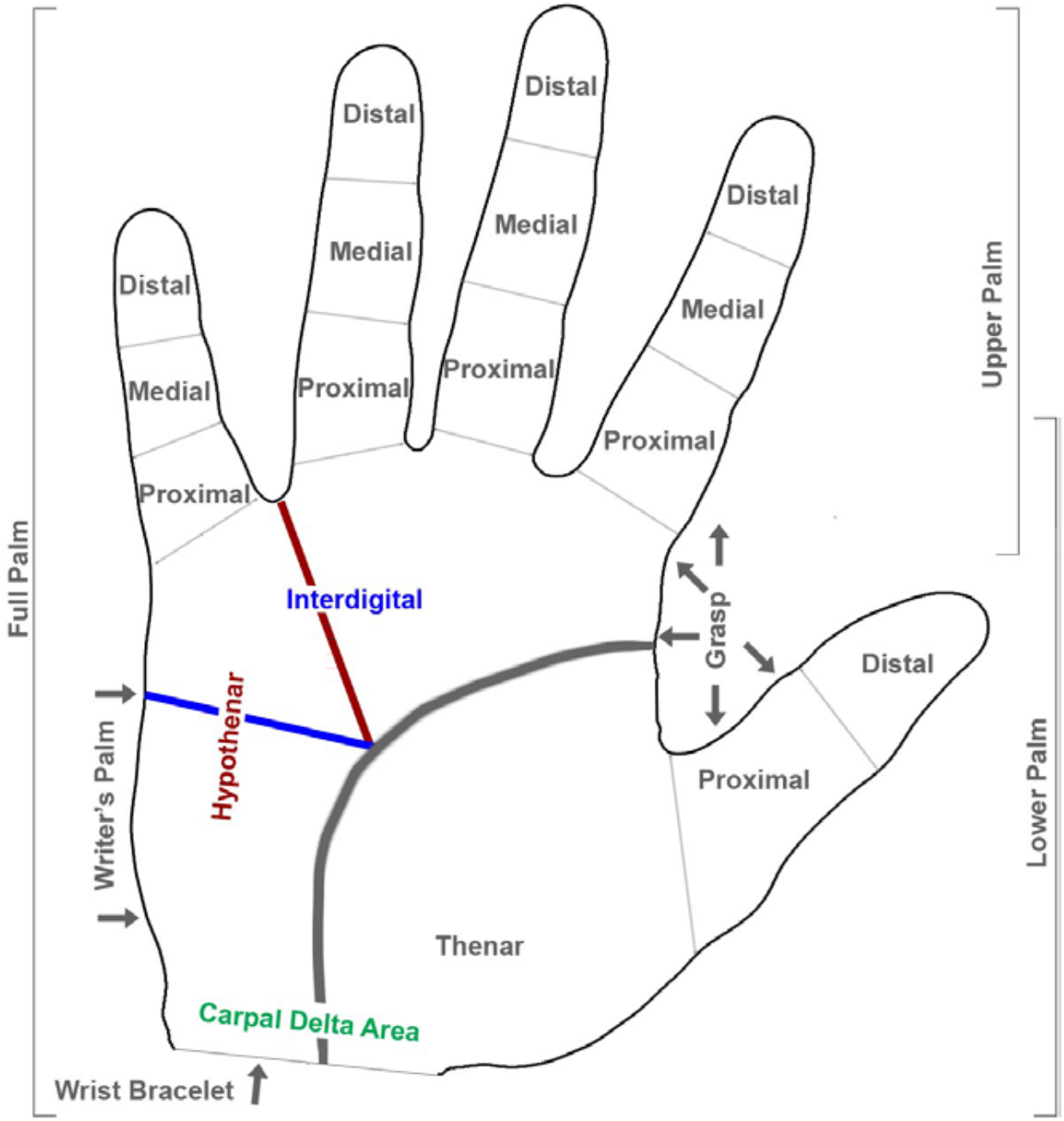

Figure 15 Finger and Palm Segment Positions

Table P-2 Friction Ridge Generalized Position Codes

Position/Portion	Type	Record Type	Code	Max Width		Max Length	
				(mm)	(in)	(mm)	(in)
Unknown Finger, Search 0 – 17	U	9, 13	0	40.6	1.6	38.1	1.5
Right thumb	F/M	4, 9, 13, 14	1	40.6	1.6	38.1	1.5
Right index finger	F/M	4, 9, 13, 14	2	40.6	1.6	38.1	1.5
Right middle finger	F/M	4, 9, 13, 14	3	40.6	1.6	38.1	1.5
Right ring finger	F/M	4, 9, 13, 14	4	40.6	1.6	38.1	1.5
Right little finger	F/M	4, 9, 13, 14	5	40.6	1.6	38.1	1.5
Left thumb	F/M	4, 9, 13, 14	6	40.6	1.6	38.1	1.5
Left index finger	F/M	4, 9, 13, 14	7	40.6	1.6	38.1	1.5
Left middle finger	F/M	4, 9, 13, 14	8	40.6	1.6	38.1	1.5
Left ring finger	F/M	4, 9, 13, 14	9	40.6	1.6	38.1	1.5
Left little finger	F/M	4, 9, 13, 14	10	40.6	1.6	38.1	1.5
Plain right thumb	F/M	4, 9, 13, 14	11	25.4	1	50.8	2
Plain left thumb	F/M	4, 9, 13, 14	12	25.4	1	50.8	2
Plain right four fingers	F/M	4, 9, 13, 14	13	81.3	3.2	76.2	3
Plain left four fingers	F/M	4, 9, 13, 14	14	81.3	3.2	76.2	3
Left and Right thumbs	F/M	4, 9, 13, 14	15	81.3	3.2	76.2	3
Right Extra Digit *(Future Capability)*	F/M	9, 13, 14	16	40.6	1.6	38.1	1.5
Left Extra Digit *(Future Capability)*	F/M	9. 13. 14	17	40.6	1.6	38.1	1.5
Unknown Friction Ridge, search all possible codes	U	9, 13	18	139.7	5.5	213	8.5
EJI or Tip (see Note)	S	9, 13, 14	19	114	4.5	127	5
Unknown Palm, Searching 21 - 38	U	9, 13	20	139.7	5.5	203.2	8
Right Full Palm	P	9, 13, 15	21	139.7	5.5	203.2	8
Right Writer's Palm	P	9, 13, 15	22	44.5	1.8	127	5
Left Full Palm	P	9, 13, 15	23	139.7	5.5	203.2	8
Left Writer's Palm	P	9, 13, 15	24	44.5	1.8	127	5
Right Lower Palm	P	9, 13, 15	25	139.7	5.5	139.7	5.5
Right Upper Palm	P	9, 13, 15	26	139.7	5.5	139.7	5.5
Left Lower Palm	P	9, 13, 15	27	139.7	5.5	139.7	5.5
Left Upper Palm	P	9, 13, 15	28	139.7	5.5	139.7	5.5
Right Other *(Unknown Right hand) Searching Right hands between 21 – 38*	U	9, 13	29	139.7	5.5	203.2	8
Left Other *(Unknown Left hand) Searching Left hands between 21 - 38*	U	9, 13	30	139.7	5.5	203.2	8
Right Interdigital	P	9, 13, 15	31	139.7	5.5	76.2	3
Right Thenar	P	9, 13, 15	32	76.2	3	114.3	4.5

Table P-2 Friction Ridge Generalized Position Codes

Position/Portion	Type	Record Type	Code	Max Width		Max Length	
				(mm)	(in)	(mm)	(in)
Right Hypothenar	P	9, 13, 15	33	76.2	3	114.3	4.5
Left Interdigital	P	9, 13, 15	34	139.7	5.5	76.2	3
Left Thenar	P	9, 13, 15	35	76.2	3	114.3	4.5
Left Hypothenar	P	9, 13, 15	36	76.2	3	114.3	4.5
Right Grasp *(Future Capability)*	P	9, 13, 15	37	139.7	5.5	203.2	8
Left Grasp *(Future Capability)*	P	9, 13, 15	38	139.7	5.5	203.2	8
Right Carpal Delta Area *(Future Capability)*	P	9. 13. 15	81	139.7	5.5	114.3	4.5
Left Carpal Delta Area *(Future Capability)*	P	9, 13, 15	82	139.7	5.5	114.3	4.5
Right full palm, including writer's palm *(Future Capability)*	P	9, 13, 15	83	139.7	5.5	114.3	4.5
Left full palm, including writer's palm *(Future Capability)*	P	9, 13, 15	84	139.7	5.5	114.3	4.5
Right index/middle *(Future Capability)*	M	14	40	40.6	1.6	38.1	1.5
Right middle/ring *(Future Capability)*	M	14	41	40.6	1.6	38.1	1.5
Right ring/little *(Future Capability)*	M	14	42	40.6	1.6	38.1	1.5
Left index/middle *(Future Capability)*	M	14	43	40.6	1.6	38.1	1.5
Left middle/ring *(Future Capability)*	M	14	44	40.6	1.6	38.1	1.5
Left ring/little *(Future Capability)*	M	14	45	40.6	1.6	38.1	1.5
Right index/Left index *(Future Capability)*	M	14	46	40.6	1.6	38.1	1.5
Right index/middle/ring *(Future Capability)*	M	14	47	63.5	2.5	38.1	1.5
Right middle/ring/little *(Future Capability)*	M	14	48	63.5	2.5	38.1	1.5
Left index/middle/ring *(Future Capability)*	M	14	49	63.5	2.5	38.1	1.5
Left middle/ring/little *(Future Capability)*	M	14	50	63.5	2.5	38.1	1.5

Key: F – Fingerprint, M – Mobile ID, P – Palm Print, S – Supplemental Print, U – Unknown Print

Note: Recommended maximum size for TIP images is 1 x 1.6 inches.

Appendix Q: Descriptors And Field Edit Specifications For Type-15 Logical Records

This section presents the descriptors and field specifications for Type-15 logical records, defined by ANSI/NIST-ITL as a Palm Print Image Record, as constrained by NGI. NGI has expanded the use of the Type-15 to include available palm print and supplemental fingerprint and palm print images as described in the ANSI/NIST-ITL. To aid in identifying which image set the image on this record type belongs, a new user-defined field to indicate the image set to which the image being transmitted belongs (e.g., is the image from the supplemental card or a palm print card). The new user-defined field, Image Source, is defined below. See Appendix P for a complete definition of each of the image sets. As NGI will be accepting images as defined in the ANSI/NIST-ITL, refer to the ANSI/NIST-ITL for complete definitions of the fields that are allowed in the Type-15. The Data Dictionary in this appendix has been organized to display Identifier, Field Number, Field Name, and Field Description.

Type-15 Data Dictionary

The Type-15 Data Dictionary only includes those fields that have been constrained by NGI/CJIS functionality. All other fields defined in the ANSI/NIST-ITL will be used as defined in that standard.

ISC 15.200 Image Source Code

This optional numeric field indicates to which source the included image belongs. This field allows images from multiple biometric sets that use the same record type to be distinguishable.

Table 49 ISC Values Table

Image Source	Value
Tenprint Fingerprint Set	1
Palm Print Set – Front of Card (including fingers on front)	2
Palm Print Set – Fingers on Back of Card	3
Supplemental Print Set	4

Two different values are used for the Palm Print card to distinguish between the index finger image on the front of the card and the index finger that is part of the set of five finger images on the back of the card. Livescan palm capture should use value 2 and is not expected to contain any finger images.

SLC 15.008 Scale Units

This field will be used to define image sampling frequency (pixel density). A value of “1” shall indicate pixels per inch. A value of “2” shall indicate pixels per centimeter. A value of “0” in this field indicates that no scale is provided, and NGI will reject transactions containing this value.

Appendix R: Descriptors And Field Edit Specifications For Type-13 Logical Records

This appendix contains the detail of the Type-13, Friction Ridge Latent, record type elements. NGI will use this record type to accept various latent, unsolved images at 1000 ppi from users for the purpose of investigative searching of different repositories. As NGI will be accepting images as defined in the ANSI/NIST-ITL, refer to the ANSI/NIST-ITL for the complete definition of the Type-13 fields. The Data Dictionary in this appendix has been organized to display Identifier, Field Number, Field Name, and Field Description.

Type-13 Data Dictionary

The Type-13 Data Dictionary only includes those fields that have been constrained by NGI functionality. All other fields defined in the ANSI/NIST-ITL will be used as defined in that standard.

SLC 13.008 Scale Units

This field will be used to define image sampling frequency (pixel density). A value of “1” shall indicate pixels per inch. A value of “2” shall indicate pixels per centimeter. A value of “0” in this field indicates that no scale is provided, and NGI will reject transactions containing this value.

Appendix AC: Acronyms

Acronym	Description
AA	Plain Arch
ABIS	DoD Automated Biometric Identification System
AC	Approximate Finger Class
ACN	Action to be Taken
AF	Air Force Serial Number
AFIS	Automated Fingerprint Identification System
AFM	Alternate Fingerprint Quality Metric
AFV	AFIS Feature Vector
AGR	Age Range
AKA	Aliases
AMN	Amnesia Victim
AMP	Amputated or Bandaged
AMPCD	Amputated or Bandaged Code
AN	Non-Immigrant Admission Number
ANS	Alphanumeric Special
ANSI	American National Standards Institute
AOL	Arrest Offense Literal
APAT	Pattern Classification
APB	Advisory Policy Board
AR	Alien Registration Number
AS	Air National Guard Serial Number, Army Serial Number, or National Guard Serial Number
ATR	Audit Trail Record
ASCII	American Standard Code for Information Interchange
ASL	Arrest Segment Literal
ATN	“Attention” Indicator
AU	Arch, Type Not Designated
AUD	Audit Code
BATQ	Biometric Audit Trail Query
BATR	Biometric Audit Trail Response
BCD	Biometric Capture Date
BDEC	Biometric Decision Submission

Acronym	Description
BDECR	Biometric Decision Response
BDEL	Biometric Delete Request
BDELR	Biometric Delete Response
BF	Bureau Fugitive Index Number
BIA	Biometric Image Available
BID	Biometric Image Description
BIL	Biometric Image List
BPX	Bits per pixel
BSI	Biometric Set Identifier
CAN	Candidate List
CAR	Criminal Tenprint Submission (Answer Required)
CCA	Computerized Contributor Address/Agency Table
CDD	Court Disposition Date
CDEL	Civil Event Deletion Request
CDELR	Civil Event Deletion Response
CG	Coast Guard Serial Number
CHQ	Characterization Quality
CI	Criminal Justice Investigative
CI	Central Pocket – Loop Whorl – Inner
CI	Canadian Social Insurance Number
CIDN	Contributor Assigned Identification Number
CIN	Contributor Case Identifier Number
CIX	Contributor Case Identifier Extension
CJIS	Criminal Justice Information Services
CLQ	Classifier Quality
CM	Central Pocket – Loop Whorl – Meeting
CMF	Criminal Master File
CNA	Criminal Tenprint Submission (No Answer Necessary)
CNL	Candidate Investigative List
CNT	File Content
CO	Central Pocket – Loop Whorl – Outer
COF	Coordinate Offsets
COM	Comment

Acronym	Description
COTS	Commercial Off-the-Shelf
CPD	Subject Photo Delete Request
CPDR	Criminal Fingerprint Direct Route
CPL	Other Court Sentence Provision Literal
CPNU	Criminal Fingerprint Processing Non-Urgent
CPR	Subject Photo Request
CRA	Core(s) Attributes
CRI	Controlling Agency Identifier
CSA	CJIS Systems Agency
CSL	Court Segment Literal
CSP	Color Space
CST	Case Title
CTF	Contrast Transfer Function
CTZ	Country of Citizenship
DAI	Destination Agency Identifier
DAT	Date of Dissemination
DCS	Directory of Character Sets
DEK	Known Deceased
DEU	Unknown Deceased
DHS	Department of Homeland Security
DI	Central Pocket – Double Loop Whorl – Inner
DLA	Delta(s) Attributes
DM	Central Pocket – Double Loop Whorl – Meeting
DMM	Device Monitoring Mode
DO	Central Pocket – Double Loop Whorl – Outer
DOA	Date of Arrest
DOB	Date of Birth
DOCE	Departmental Order Channeling Electronic
DoD	Department of Defense
DOD	Date of Death
DOM	Domain Name
DOO	Date of Offense
DORBE	Date of Rap Back Event

Acronym	Description
DOS	Disk Operating System
DPR	Date Printed
DSPE	Disposition File Maintenance Submission
DSPR	Disposition File Maintenance Response
DST	Distal
DTR	Rap Back Expiration Date Range
DUI	Device Unique Identifier
EAD	Employer and Address
EBTS	Electronic Biometric Transmission Specification (started with version 8 of this document)
EHRR	External History Request Response
EJI	Entire Joint Image
EMUF	Electronic In/Manual Out User Fee
EQER	External Query History Error Response
EQHR	External Query History Request
EQRR	External Query History Request Response – Summary
ERRA	Administrative Transaction Error
ERRB	Biometric Search Error
ERRI	Information Transaction Error
ERRL	Latent Transaction Error
ERRR	Transaction Error (Electronic Response)
ERRT	Tenprint Transaction Error
ERS	Electronic Rap Sheet
ESI	External Subject Identifier
EXP	Response Explanation
EYE	Eye Color
EVI	Event Identifier
FANC	Federal Applicant (No Charge)
FAUF	Federal Applicant User Fee
FBI	FBI Number
FBI	Federal Bureau of Investigation
FCP	Fingerprint Characterization Process
FDSP	Electronic Fingerprint Disposition Submission

Acronym	Description
FFN	FBI File Number
FGN	Finger Number
FGP	Friction Ridge Generalized Position
FIDR	Foreign Information Direct Route
FIS	Biometric Image Submission
FISR	Biometric Image Submission Response
FIU	Fingerprint Image(s) Updated
FMT	Minutiae Format
FNDR	Federal No Charge Direct Route
FNR	Finger Number(s) Requested
FNU	FBI Number
FP	Fingerprint
FRS	Facial Recognition Search Request
FS	File Separator – indicates the record is complete (end of file)
FSI	Foreign Subjects of Interest
FVR	Fingerprint Verification Request
FV*x*	Full Finger View (*x* = a number)
GCA	Grayscale Compression Algorithm
GEO	Geographic Area of Search
GMT	Greenwich Mean Time
GS	Group Separator – indicates a new field is to follow
HAI	Hair Color
HGT	Height
HLL	Horizontal Line Length
HPS	Horizontal Pixel Scale
HTI	Hit Type Indicator
HTR	Height Range
HW	Hardware
IAFIS	Integrated Automated Fingerprint Identification System
ICO	Identification Comments
ID	Identity or Identification
IDC	Information Designation Character
IdHS	Identity History Summary

Acronym	Description
IFS	Identification Firearms Sales
IIDS	Iris Image Identification Submission
III	Interstate Identification Index
IIIS	Iris Image Investigation Search
IMA	Image Capture Equipment
IMG	Image Data
IMP	Impression Type
IMT	Image Type
IO	Identification Order Number
IQS	Image Quality Specification
IRQ	Biometric Image/Feature Retrieval Request
IRR	Image Request Response
ISO	International Organization for Standardization
ISR	Image Summary Response
ITL	Information Technology Laboratory
ITN	Identification, Tasking, and Networking
JPEG	Joint Photographic Experts Group
LCD	Latent Capture Date
LESC	Law Enforcement Support Center
LFFS	Latent Friction Ridge Features Search
LFIS	Latent Friction Ridge Image Search
LFS	Latent Fingerprint Image Submission
LPNQ	Latent Penetration Query
LPNR	Latent Penetration Query Response
LRSQ	Latent Repository Statistics Query
LRSR	Latent Repository Statistics Response
LS	Left Slant Loop
LSR	Latent Submission Results
MAK	Make
MAP	Miscellaneous Applicant Civil
MC	Marine Corps Serial Number
MD	Mariner’s Document or Identification Number
MDX	Minutiae Identification Index

Acronym	Description
MED	Medial
MET	Method
MFD	Method of Feature Detection
MIL	Military Code
MIN	Minutiae
MMS	Make/Model/Serial Number
MNT	Minutiae Type Designation
MNU	Miscellaneous Identification Number
MODL	Model
MOU	Memorandum of Understanding
MP	RCMP Identification of Fingerprint Section Number
MPR	Missing Person
MRC	Minutiae and Ridge Count Data
MSG	Message [or] Status/Error Message (appears both ways)
MTF	Modular Transfer Function or Modulation Transfer Function (appears both ways)
NA	National Agency Case Number
NAM	Name
NCIC	National Crime Information Center
NCR	Number of Candidates / Images Returned
NDR	Name of Designated Repository
NFF	National Fingerprint File
NFS	Network File System
NFUE	Non-Federal User Fee Expedite
NFUF	Non-Federal Applicant User Fee
NGI	Next Generation Identification System
NIR	Number of Images Requested
NIST	National Institute of Standards and Technology
NMN	Number of Minutiae
NNDR	Non-Federal No Charge Direct Route
NOT	Note Field
NS	Navy Serial Number
NSR	Native Scanning Resolution
NTR	Nominal Transmitting Resolution

Acronym	Description
OA	Originating Agency Police or Identification Number
OCA	Originating Agency Case Number
OCP	Occupation
OEM	Original Equipment Manufacturer
OFO	Other Federal Organizations
ORI	Originating Agency Identifier
ORN	Orientation Uncertainty
PAS	Photo Acquisition Source
PAT	Pattern Level Classifications
PATCL	Pattern Classification Code
PCD	Palm Print Capture Date
PDR	Subject Photo Delete Response
PEN	Penetration Query Response
PHD	Photo Date
PHT	“Photo Available” Indicator
PI	Personal Identification Number (State Issued Only)
PI	Plain Whorl – Inner
PM	Plain Whorl – Meeting
PO	Plain Whorl – Outer
POA	Pose Offset Angle
POB	Place of Birth
POS	Subject Pose
PP	Passport Number (U.S. only)
PPA	Palm Prints Available
ppi	pixels per inch
PRR	Subject Photo Request Response
PRX	Proximal
PRY	Transaction Priority
PS	Port Security Card Number
PUM	Position Uncertainty
PXS	Photo Description
QC	Quality Check
QMS	Quality Measure

Acronym	Description
RAC	Race
RAP	Request for Electronic Rap Sheet
RAR	Return All Records Indicator
RBATN	Rap Back Attention Indicator
RBC	Rap Back Category
RBDI	Rap Back Disclosure Indicator
RBEI	Rap Back Event Information
RBFN	Rap Back Field Name
RBFT	Rap Back Field Text
RBIHS	Rap Back Identity History Summary Request
RBIHSR	Rap Back Identity History Summary Response
RBN	Rap Back Activity Notification
RBMI	Rap Back Maintenance Indicator
RBMNT	Rap Back Maintenance Request
RBMNTR	Rap Back Maintenance Response
RBNF	Rap Back Activity Notification Format
RBNI	Rap Back Activity Notification Identifier
RBOO	Rap Back Opt Out In-State Indicator
RBRN	Rap Back Renewal Notification
RBRPT	Rap Back Subscription List Request
RBRPTR	Rap Back Subscription List Response
RBSCRM	Rap Back Subsequent Subscription Request - Criminal
RBSCVL	Rap Back Subsequent Subscription Request - Civil
RBSD	Rap Back Subscription Date
RBSI	Rap Back Subscription Identifier
RBSL	Rap Back Subscription List
RBSR	Rap Back Subscription Response
RBST	Rap Back Subscription Term
RBT	Rap Back Trigger
RBTED	Rap Back Triggering Event Details
RBTD	Rap Back Term Date
RBUD	Rap Back User Defined
RCD1	Ridge Core Delta One for Subpattern Classification

Acronym	Description
RCD2	Ridge Core Delta Two for Subpattern Classification
RCN1	Ridge Count Number One
RCN2	Ridge Count Number Two
RDG	Minutiae Ridge Count Indicator
REC	Response Code
RES	Residence of Person Fingerprinted
RET	Retention Code
RFP	Reason Fingerprinted
RFR	Request Features Record
RISC	Repository for Individuals of Special Concern
ROV	Region of Value
RPIS	Rapid Fingerprint Identification Search
RPISR	Rapid Fingerprint Identification Search Response
RPR	Request Photo Record
RS	Record Separator – indicates a repetition of field or group of subfields are to follow
RSC	Reason Supervision Cancelled
RSO	Octant Residuals
RSR	Repository Statistics Response
RSV	Reserved
RTID	(Canada) Real Time Identification
SAP	Subject Acquisition Profile
SCH	Subject Criminal History (legacy)
SCNA	Subject Control Number
SCO	Send Copy To
SDOB	Submitted Date of Birth
SEC	Subject Eye Color
SED	Custody or Supervisory Status End Date
SEG	Fingerprint Segment Position(s)
SERNO	Serial Number
SEX	Sex
SHC	Subject Hair Color
SHPS	Scan Horizontal Pixel Scale
SIB	State Identification Bureau

Acronym	Description
SID	State Identification Number
SI	Subject Identifier
SII	Supplementary Identity Information
SLC	Scale Units
SLE	Custody or Supervisory Status Literal
SMD	SMT Descriptors
SMT	Scar, Mark and Tattoo
SMS	SMT Size
SNAM	Submitted Name
SOC	Social Security Account Number
SOR	Source Representation
SOR	Sexual Offender Registry
SPA	Subject Pose Angle
SPMNT	Special Repository Maintenance Request
SPMNTR	Special Repository Maintenance Response
SPC	Special Population Cognizant Files
SPN	Special Population Cognizant Notification
SQM	Segmentation Quality Metric
SQS	Subject Quality Score
SRA	Supervised Release Action
SRB	Search Results – Biometric
SRC	Source Agency
SRE	Submission Results – Electronic
SRF	Search Results Findings
SRL	Search Results — Latent
SRNR	Supervised Release Notification Request
SRNRR	Supervised Release Notification Response
SRT	Search Results — Tenprint
SS	Selective Service Number
SSD	Custody or Supervisory Status Start Date
SST	Supervised Status Type
STD	Special Table Data
STT	Supervision Transferred To

Acronym	Description
SVPS	Scan Vertical Pixel Scale
SW	Software
SXS	Subject Facial Description
TAA	Treat As Adult
TCL	Tattoo Color
TCN	Transaction Control Number
TCR	Transaction Control Reference
TIP	Rolled Tip
TOT	Type of Transaction
TP	Tenprint
TPIS	Tenprint Fingerprint Image Search
TPRS	Tenprint Rap Sheet Search Request
TPRR	Tenprint Rap Sheet Response
TPTP	Tenprint Tenprint
TSR	Type of Search Requested
TT	Tented Arch
TXTSRCH	Text-Based Facial/SMT Photo Search
UBM	Unsolved Biometric Match Notification
UC	Unclassifiable [or] Unable to Classify
UCN	Universal Control Number
UDF	User-Defined Field
UHN	Unsolicited Hit Notification
ULD	Unsolved Latent Record Delete Request
ULDR	Unsolved Latent Record Delete Response
ULF	Unsolved Biometric File
ULM	Unsolved Latent Match Notification
ULR	Unsolved Latent Retained
UP	Unable to Print
UPF	Unsolved Photo File
US	Unit Separator – indicates another subfield is to follow
UUBD	Unsolicited Unsolved Biometric Delete
UULD	Unsolicited Unsolved Latent Delete
VA	Veterans Administration Claim Number

Acronym	Description
VAR	Value-Added Reseller
VER	Version
VID	Version Identifier
VLL	Vertical Line Length
VPS	Vertical Pixel Scale
WAN	Wide Area Network
WGT	Weight
WSQ	Wavelet Scalar Quantization
WTR	Weight Range
WU	Whorl, Type Not Designated
XACT	External System Link Activity Request
XACTR	External System Link Activity Response
XI	Central Pocket – Accidental Whorl – Inner
XM	Central Pocket – Accidental Whorl – Meeting
XML	eXtensible Markup Language
XMNT	External System Link Maintenance Request
XMNTR	External System Link Maintenance Response
XO	Central Pocket – Accidental Whorl – Outer
XXX	Unknown